THE MODEL ENGINEER

Vol. 103 No. 2570 THURSDAY AUGUST 24 1950 9d.

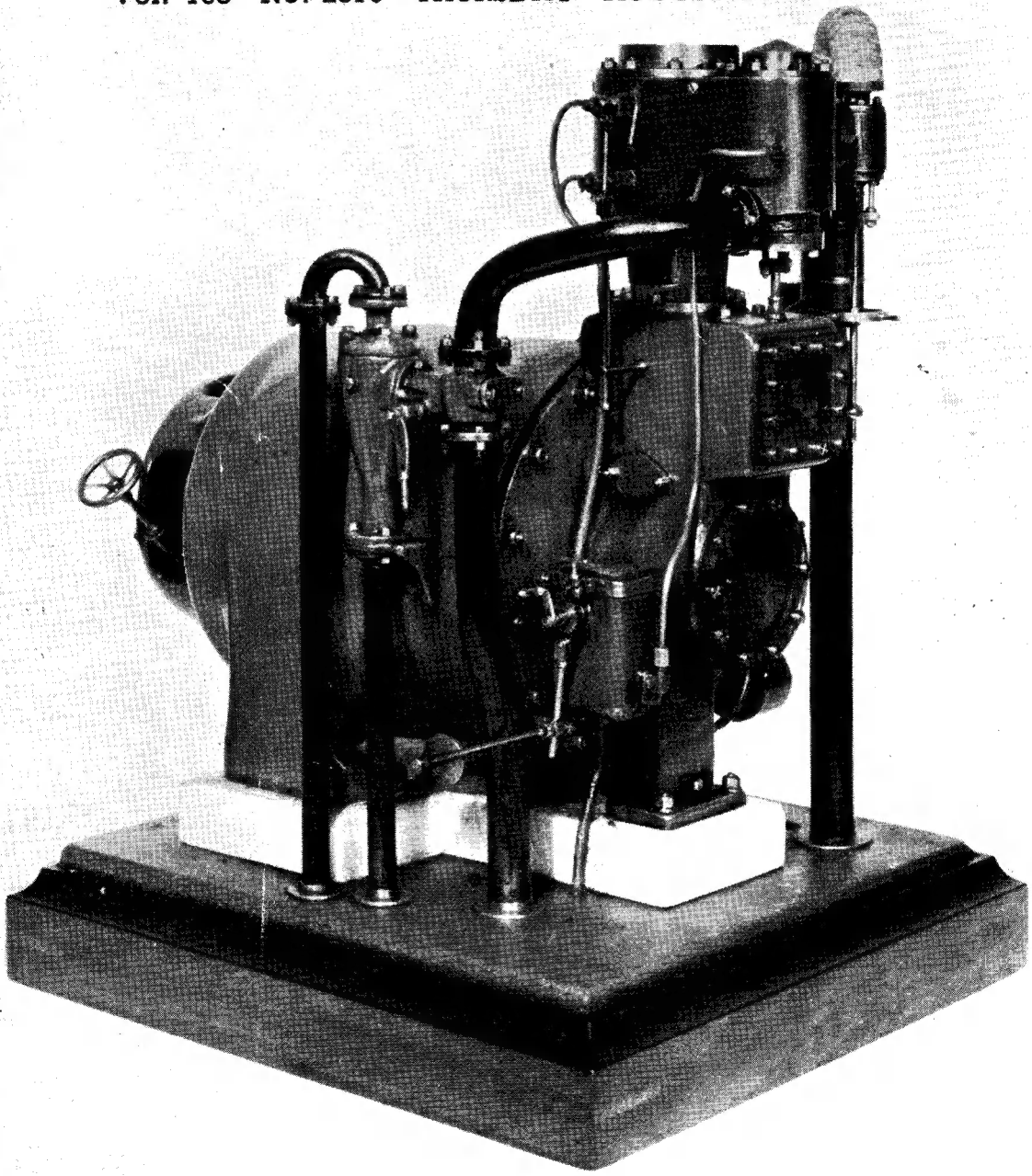

The MODEL ENGINEER

PERCIVAL MARSHALL & CO. LTD., 23, GREAT QUEEN ST., LONDON, W.C.2

24TH AUGUST 1950 VOL. 103 NO. 2570

Smoke Rings 263
Jottings at the Show 265
In the Workshop—A Small Power-driven Hacksaw Machine .. 269
An Adjustable Tool Holder 272
Driving a Lathe by Petrol Engine .. 273
Building "Triton II"—An Experimental Hydroplane 275
Students' Drawing Instruments .. 277
Novices' Corner—Removing and Replacing Bushes 278
The Potts Tailstock Turret 280
"Pamela"—A 3½-in. Rebuild of a Southern Pacific 281
For the Bookshelf 285
A Three-throw Plunger Pump .. 286
A 2½-in. Gauge Free-lance Electric Locomotive 288
In Defence of a Noble Ally 290
"Donkey" Modifications 293
The South London Regatta 294
Queer Lathes 295
A Smash—and a Repair 296
Lubricating the Spindle of the "M.E." Drilling Machine 297
Totton and New Forest Society's Exhibition 298
Practical Letters 300
Club Announcements 302
"M.E." Diary 303

SMOKE RINGS

Our Cover Picture

● SOME OF our older readers may recognise the engine as a Championship Cup winner of many years ago—at the 1924 "M.E." Exhibition, to be precise. It was built by the late Mr. H. G. Eckert, and is at present in the S.M.E.E. collection of models built by members. In many respects, this model is of outstanding interest; its design, though free-lance and not, so far as can be ascertained, even an approximate copy of anything in full-size practice, is fully in accordance with correct practice both in steam engines and electrical generators, and the combination of the two in a single unit is both logical and practical. No castings are used in the construction of the model, which is entirely fabricated by brazing and subsequently machined. The crankcase of the engine is made from no less than 26 pieces of mild-steel plate, and similar methods of construction are used on the carcase of the four-pole dynamo and its endplate. Handwheel adjustment of the brushes is provided, also an ironclad junction box for the field and armature leads. The steam engine is fitted with an inside-admission piston-valve, which is of steel, working in a phosphor-bronze liner; all steam ports were machined from the solid. Glass plates are inset in the end of the crankcase and crosshead trunk so that the working parts are visible, and lubrication is supplied under pressure from a pump driven from the crankshaft. This model was among those sent to Sweden for the model exhibition held there earlier in this year.

North London S.M.E. Exhibition

● ANY READERS who are able to visit the show should make a note that the North London Society's fifth model engineering exhibition will be held from September 1st to 9th, at the Ewen Hall, Wood Street, High Barnet. The exhibition will be open daily, except Sunday, from 2 p.m. till 9 p.m.; on Saturdays the opening time will be 10 a.m. Monday, September 4th, after 6 p.m. has been primarily allocated to welcoming visitors from other clubs.

An American Traction Engine

● SOME MONTHS ago, we referred to the growth of interest in traction engines in America, and we have more than once pointed out differences of detail as between American and British practice. At one time, there were many different companies building agricultural engines all over the United States, and one of the best-known names in this one-time thriving industry was that of J. I. Case.

We have received from Mr. Robert Stenholm, of Rockford, Illinois, the photograph which is reproduced on this page; it shows a fine 1-in. scale J. I. Case engine which he has built from Chas. Cole prints. The engine is practically a scaled-down replica of its prototype, the only alterations being those which are essential to a working model; it is a coal burner, works at 100 lb. pressure and is 11½ in. high from the ground to the top of the stack. We think most readers will agree that Mr. Stenholm has produced a very fine piece of work.

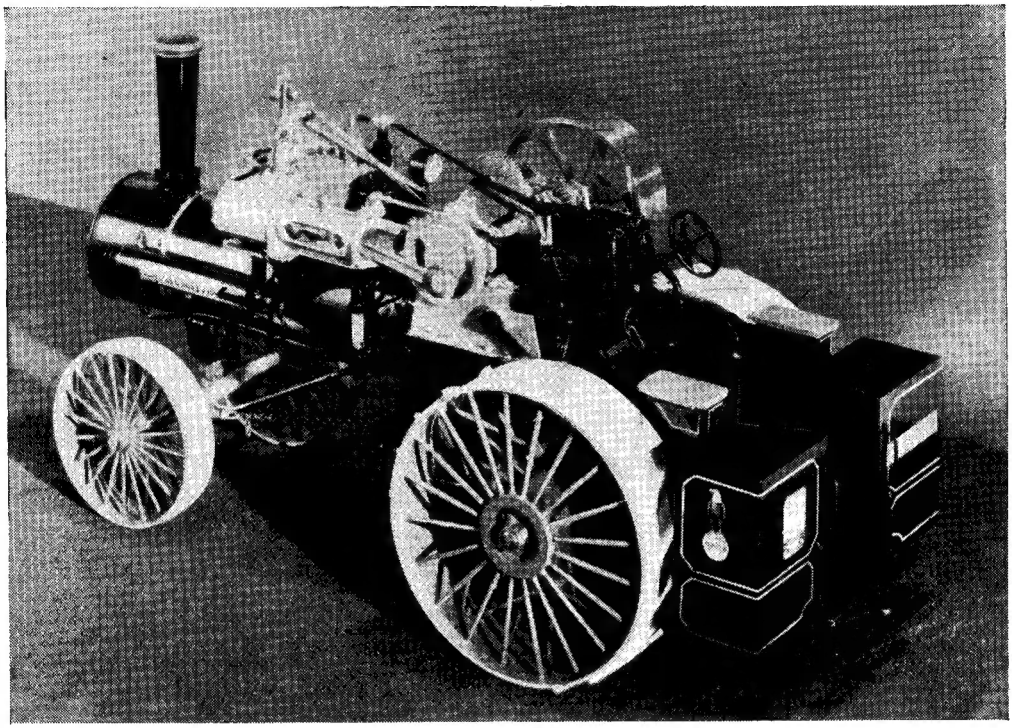

A National Rally at Birmingham

● THE BIRMINGHAM Society of Model Engineers is organising a national rally of locomotive enthusiasts at its splendid track at Campbell Green on September 9th and 10th next. This event is regarded as the most important in the society's calendar and, although as many other societies as possible have been notified of it, a cordial welcome awaits any individual model locomotive enthusiasts who can arrange to attend. Admission to the rally will be by ticket for both days, but a "registration" fee of 6d. will be charged in respect of each person wishing to attend.

Tickets can be obtained from the Birmingham Society of Model Engineers Ltd., Campbell Green, 87, Horse Shoes Lane, Sheldon, Birmingham, and early application is advisable.

Exhibition at Knutsford

● WE HEAR that a model engineer and arts and craft exhibition is again being held in Knutsford at the Egerton School. It will be held on Friday and Saturday, August 25th and 26th, and is being arranged by the Rotary Club with the object of creating interest in model engineering and to eventually form a club in the town.

The times of opening are: Friday, 6 p.m. to 9.30 p.m.; Saturday, 1 p.m. to 9 p.m.

A Society for Halifax

● MR. DENNIS BLAND, of Halifax, has written to advise us of the recent formation, in that town, of the Forrest Cottage Model Engineering Society. We are somewhat surprised to learn from him that there is no similar society in Halifax, and we think there are readers in that area who will be glad to learn of the new society's existence. We extend our good wishes for all possible success and future prosperity. Anybody desiring to join should communicate with Mr. Bland, who is the hon. secretary. His address is: 13, Buxton Street, Lee Mount, Halifax.

Jottings at the Show

by W. J. Hughes

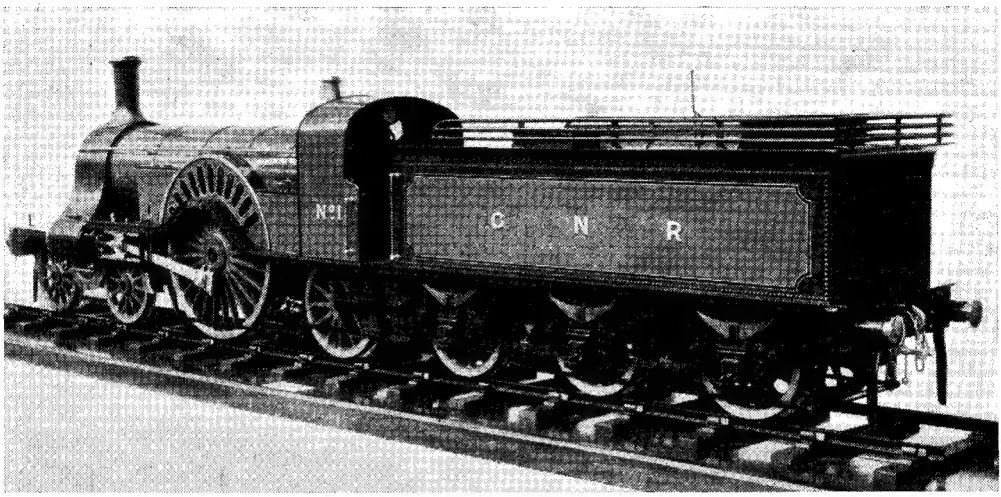

F. W. Hebblethwaite's ¾-in. scale Stirling 8-footer, beautifully detailed, lined, and finished. Notice bracket for alarm cord on tender

FIRST impressions of the 1950 "M.E." Exhibition were that, as at most shows, the exhibits could be divided into three categories—very good, good, and not so good. True, one or two of them were of a poorer standard still, but I feel sure that those modellers who perpetrated these efforts, having seen them side-by-side with their peers, will not have the temerity to exhibit again until their work achieves *at least* the "not-so-good" class.

At the same time, do not let them despair, for even the winners of the Championship Cups were beginners once!

Looking first at the locomotives, one was struck by the fact that miniature nameplates of *correct appearance*—and that's important!—can make a vast amount of difference to the realness of appearance of the whole job. For example, F. W. Hebblethwaite's beautiful Stirling Single-wheeler bore real little plates on the splashers inscribed (in raised letters) "Great Northern Railway, Makers, Doncaster. No. 50. 1870,"

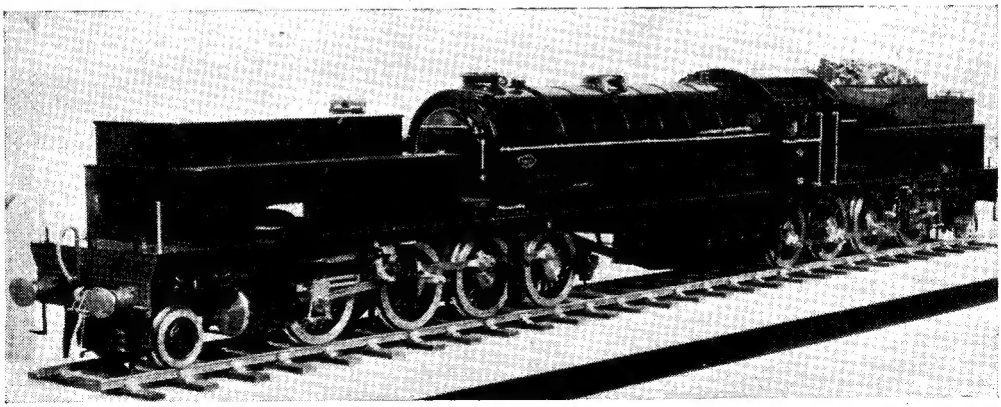

Imposing on the grounds of size alone, this 3½-in. gauge Garratt by E. M. Thomas was also impressive because of the finish. Note the nameplates referred to in text

all symmetrically set out in an oval frame. This engine was worthy of very close inspection; the close-riveting on tender and running boards was excellent, and the lining and lettering were beautifully done. A toolbox in the tender contained a full kit of miniature tools—hammer, wrench, etc.—and a bracket was fitted for the "communication cord," for in those days this ran outside the carriages and was attached to the whistle of the engine. Other details on this 8-footer included separate tyres held on by studs, and dummy injectors on each side.

"War Harness for Man and Horse" by W. F. Bayes—an unusual and picturesque type of model. Notice the armoured saddle to protect thighs and buttocks

Another locomotive which featured correct-looking "manufacturer's" nameplates was the impressive L.N.E.R. Garratt locomotive by E. M. Thomas. I imagine that if she performs as she looks, it would be a pleasure to get her on the track and see what she could do.

The unusual model always appeals to me, and R. E. Tustin's Festiniog Railway train was *very* different from those around it, with its Fairlie double-ended locomotive *Merrddin Emrys* 0-4-4-0. I have never seen this type modelled before, but commend the idea to those who want a "different" model. She'd be quite a passenger-hauler if built to 1-in. scale for 3½-in. gauge!

It was rather difficult to believe that some of the intricate carved and engraved work in the showcase of the Society of Ornamental Turners *was* entirely lathe work, and it must have been an eye-opener to many whose lathe operations are confined to ordinary turning, with an odd spot of drilling and milling. But to me the most satisfying piece in the whole case was a fluted bowl in oak, built up in twelve sectors, glued together, with an integral built-up base.

There were quite a number of exhibits from my home city, and most of them I had seen already at our local exhibitions. However, the two R.N.L.I. lifeboats (one radio-controlled) by E. N. Bays were new to me, and I hope we shall see them at a future Sheffield exhibition. I hope, too, that we shall see the builder at our future meetings, incidentally!

An A.S.R.L. by G. E. J. Weeks struck me because with more attention to detail and finish it could have been in the "good" class, instead of the "not-so-good." As an example, the guns and turrets were much too heavy and out-of-scale-looking, and while I do hope that this builder (and others) will take my remarks in the friendly spirit in which they are offered, he really has no excuse for ventilators of that shape, when he lives by the sea!

About three years ago Vosper's announced their new 60-ft. motor yacht, the *Viking* design, and the following summer I had the pleasure of seeing one of the new boats *White Heather*, at Bridlington. She was all that one would expect of these builders—trim, beautifully finished, and elegant. These are qualities which A. S. Ablett has well captured in his 40 in. model of the *Viking*, though I wish he could have found a closer-grained timber for his deck planking. The planks themselves were well-fitted, but the open grain destroyed the illusion. This is a point well worth bearing in mind by some other ship-modellers, too.

These notes are being written before the results of the judging are announced, but it will greatly surprise me if the names of both husband and wife, D. and I. McNarry, do not figure therein! The *Caronia* of the former and the P.S. *Great Western* of the latter were exquisite pieces of workmanship, and Mrs. McNarry's activities prove that when the fair sex starts modelling, the "not-so-good" among the he-men had better look out! I wish I could get my better-half interested in traction engines! Talking of which, I must congratulate J. N. Woollett, a fellow-member of the Road Locomotive Society, on his 1-in. scale traction-engine. It is hoped to describe and illustrate this in a subsequent article, so I will not anticipate beyond saying that I liked it exceedingly.

J. W. Ayres had a nice finish—not too polished—on his two-cylinder horizontal mill engine. Fitted with Stephenson link-motion, this would be a pleasing engine to watch working under steam or compressed air. A point to note is that an adequate number of studs was used to secure the covers of the cylinders and steam-chests, instead of the half-dozen or so that one sometimes sees. Another stationary engine was the "Grass-

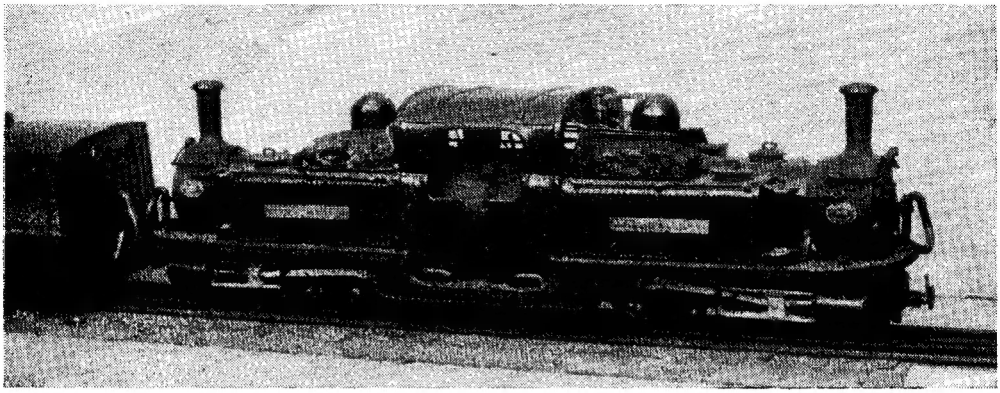

The Festiniog Railway Fairlie locomotive, 0-4-4-0, built in 7-mm. scale by R. E. Tustin. Another finely detailed model—note coal-shovel and rake projecting from open cab window

hopper" by H. J. Hawker, which again would be most satisfying to watch slowly turning over under pressure. But in this model, as in the Vosper, the grain of wood spoiled the illusion to some extent, for though the cylinder-lagging was scored to represent separate planks, the

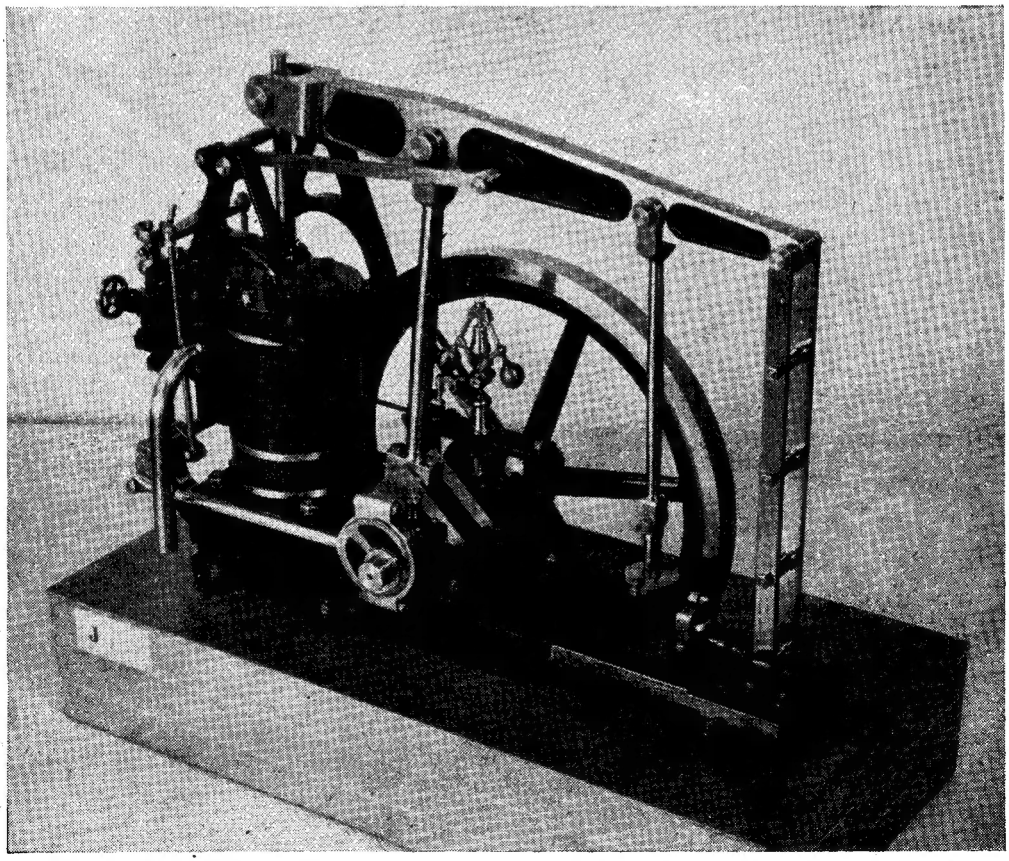

A very nice example of a type of stationary engine which is not often modelled—the "Grasshopper" engine by H. J. Hawker built to 1-in. scale

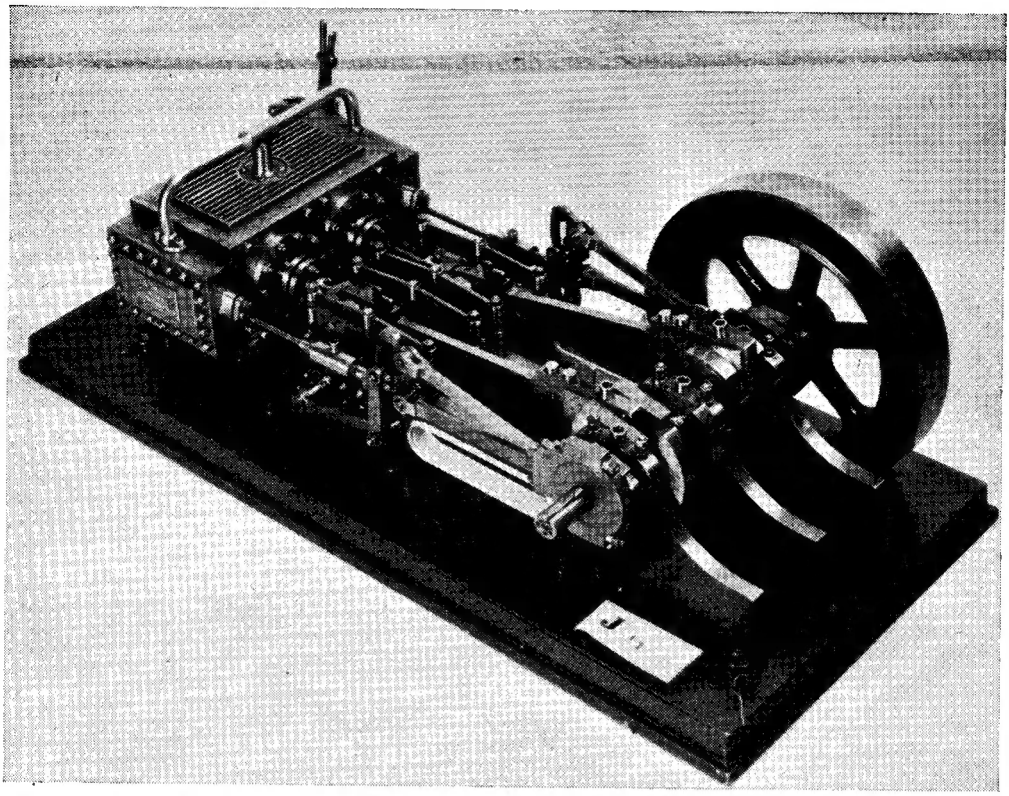

A nicely finished two-cylinder mill engine by J. W. Ayres, fitted with Stephenson link-motion. The connecting-rods are fitted with split-brasses and wedge cotter

"silver grain" or medullary rays showed that in fact the "planks" were *not* separate!

As always, the question of "finish" arose on an unduly large proportion of the "not-so-goods." One has the impression that, working against time, some builders put all they know into the building, and leave inadequate time for the finish—in particular, for the preparation of the groundwork. It's no use using the finest enamel for the finishing coat if the underneath surface is as rough as the proverbial bear's hide—it should be as smooth as the equally proverbial baby's cheek! Absolute cleanliness, and suitability, of brushes is another important factor. As for lettering, there is a mistaken idea that one has to have a "flair" for it. Rubbish! It just needs practise like everything else! It needs the correct tool, too, but *practise* is the thing.

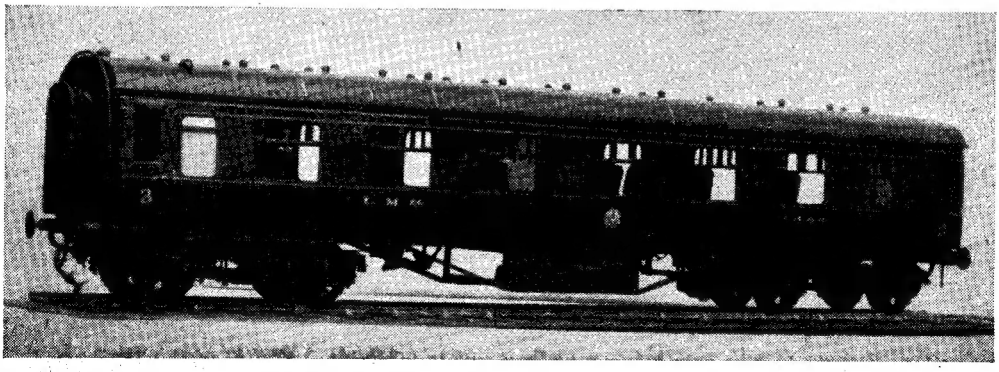

D. M. Honeyman's ⅜-in. scale L.M.S. coach

IN THE WORKSHOP

by "Duplex"

No. 70—A Small Power-driven Hacksaw Machine

FOR some time past, the construction of a small power-driven hacksaw has been under consideration. It was thought that the ordinary commercial type of machine was unnecessarily large for use in the small workshop and would rarely, if ever, be used to its full capacity. What was aimed at was a small machine of, say, 1½ in. capacity that would do all the ordinary sawing and cutting-up work, leaving the very large work occasionally required, to be dealt with, as in the past, with the hand hacksaw. Moreover, it was decided to fit the accurately made, standard Myford machine vice, and this in part determined the nominal capacity of the machine.

Rapidity of action was not considered an important factor, for the machine could be left, while some other work was undertaken and would stop automatically on completion of the cut.

The design of the components was made as simple as possible by using standard sizes of flat mild-steel, and, in addition, a few plain castings were employed in the construction to form bearings or to serve as rigid mountings for the parts supporting the saw frame.

On the whole, the machine may be regarded as compactly designed, for the baseboard on which the machine and its driving motor are mounted measures 23 in. by 7 in., and the base-plate of the machine itself is 5 in. wide and 12½ in. long.

Durability has also been taken into account, and the countershaft and crankshaft bearings of mild-steel to cast-iron are lapped to a close fit and are provided with an adequate lubrication system. On the score of durability, as well as to keep down the width of the connecting-rod bearings, both the small- and the big-end of the rod are fitted with standard ball-bearings, which will require only occasional lubrication.

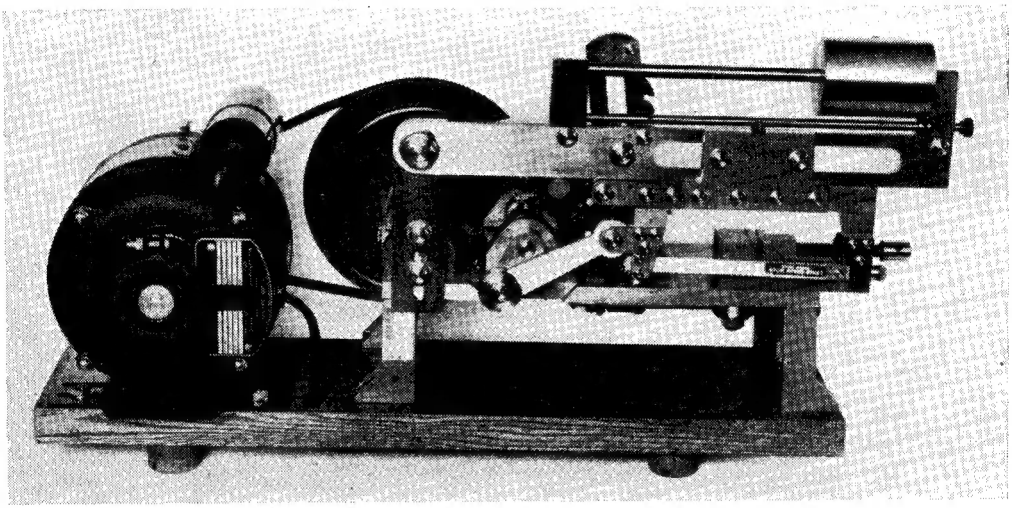

Fig. 1. The complete machine in its final form

To increase the scope of the machine, the height of the saw above the vice has been made adjustable so that a parallel cut can be taken when sawing components to shape; in addition, the vice can be swivelled when angular cutting is required.

Although the driving motor and the machine itself can, if desired, be fixed permanently to the bench top, it was thought advisable to mount these two components on a baseboard, so that the complete machine could be moved from place to place or have its position altered to accommodate a piece of work of unusual length. To enable the machine to be left unattended while working, automatic switching-off at the end of the cut was effected by fitting a Burgess micro-switch controlled by an adjustable tripping gear.

Although the cutting action of the saw blade must necessarily give rise to some noise, there is no reason why extraneous noises should result from the working of the machine itself. With this in mind, the primary drive from the motor

to the countershaft is by V-belt, and from this shaft the drive to the crankshaft is by means of a fabroil pinion meshing with a standard cast-iron lathe change wheel. With this arrangement, the complete drive not only runs almost silently, but it is also compact and normally gives a reduction ratio of 16 to 1.

In addition to the bench model machine, the hacksaw has been designed for attachment to the lathe bed where it is driven from the lathe mandrel. In this form, the construction is much simplified for the components comprising the drive are omitted and, instead, the short crankshaft is gripped in the self-centring chuck. The machine itself is then secured to the lathe bed by giving a partial turn to a clamp lever situated on top of the baseplate; at the same time, the baseplate is accurately located by means of an adjustable tenon fitting between the bed shears.

The bench machine in its final form is illustrated in Figs. 1 and 2 but, before it was possible to design and construct this machine, it was found necessary to make an experimental model in order to determine the value of several unknown factors. The first problem to be faced was the question of what type of saw blade to use. As the nominal capacity of the machine was little more than 1½ in., and the stroke was made 2¾ in. for the sake of compactness, a blade length of 6 in. seemed ample and a greater length would only mean loss of rigidity.

The only 6 in. blade obtainable was the Eclipse Junior blade which is ¼ in. wide and has 32 teeth per inch. The wavy form of set given to the teeth slightly increases the breadth of the cutting edge and, although this is an excellent provision for all ordinary hand work, it means that the blade must be rather heavily weighted when fitted to a machine in order to ensure that the teeth cut properly. If, however, this weight is excessive, the blade will tend to be bowed in an upward direction and it will not then travel on a straight path when cutting the material. Nevertheless, this blade was found to cut really well on light work and, under the rather exacting conditions imposed, it retained its free-cutting qualities over a long period. When, however, the blade eventually became worn and in part lost its set, it was apt to wander and not cut the material squarely. The next trial was made with a 9 in. × 18 teeth high-speed steel blade; this was, of course, found to be more rigid and it continued to cut squarely even when worn. It was felt, however, that the excess length of the blade merely reduced its rigidity and detracted from the compactness of the machine as a whole. The next step was to reduce a 9 in. blade to a length of 6 in. and to fit it in the frame previously used for the 6 in. Junior blade. This proved most successful and the blade not only cut well and looked right, but the shortening further increased its rigidity and made its proportions more nearly equivalent to those of a normal machine hacksaw blade. As the Eclipse Junior blade and the shortened high-speed steel blade both gave such good results under suitable working conditions, it was decided to make the saw frame to take either blade at will.

The purpose of testing the blades in this way was also to find out whether it was necessary to give relief to the blade by decreasing the pressure on the return or idle stroke.

A hydraulic gear was designed for this purpose, but, as the blades did not appear to suffer damage

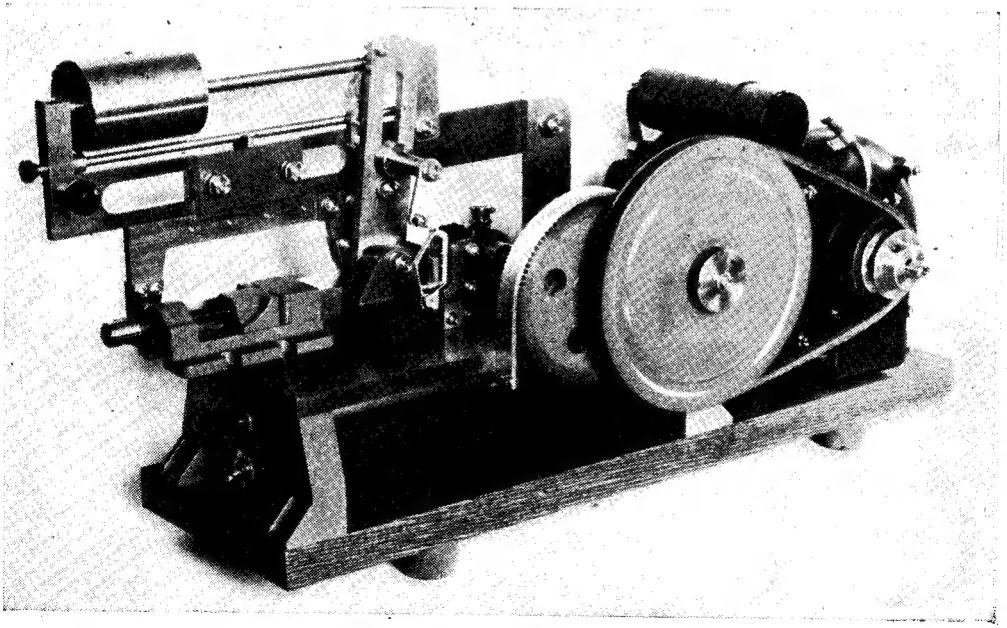

Fig. 2. The finished machine seen from behind

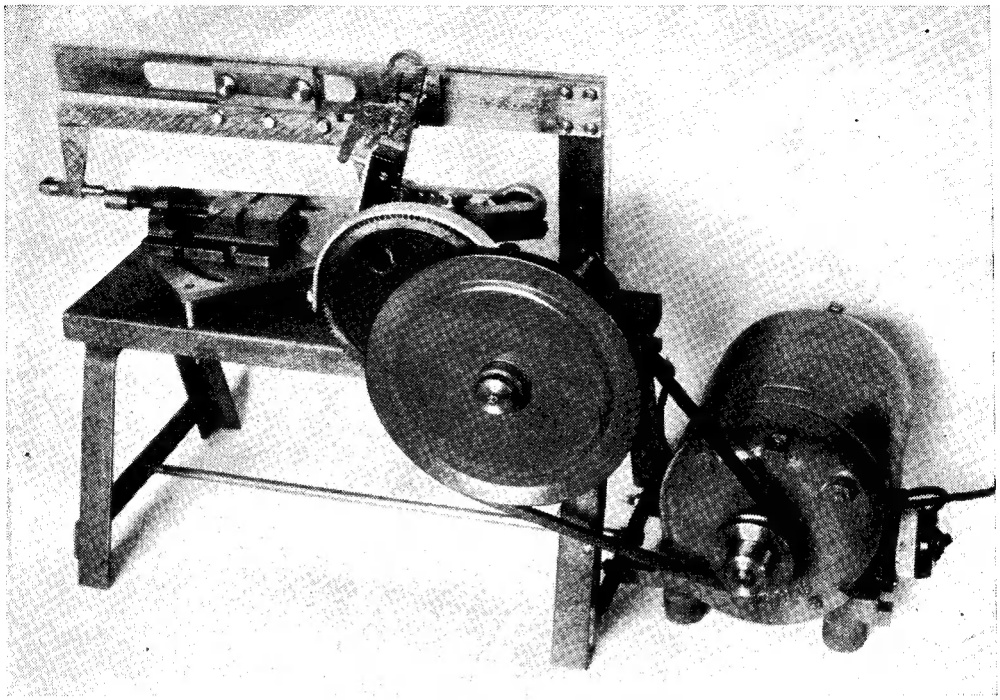

Fig. 3. The experimental machine

when used without this fitting, it was decided, on the score of simplicity to omit the device. This conviction was strengthed on visiting a small factory where the relief gear of the hacksaw machine had been disconnected, without apparently seriously affecting the life of the saw blades.

As will be described later, however, the construction of the machine does provide for giving some relief to the blade on its backward stroke.

A series of trials were made with different weights loading the saw frame, and, as might be expected, the cutting rate was increased as weight was added. Nevertheless, it was taken into consideration that : bowing of the blade must be avoided : the absence of a relief gear might damage the teeth if overloaded : and, after all, accuracy and not a fast cutting rate was of first importance. Consequently, a moderately heavy weight was fitted which gave effective cutting, and, in addition, the weight was made to slide so that a suitable loading could be given to either type of blade fitted.

Although the gear ratio of the pinion drive is fixed, the rate at which the blade travels can be adjusted by altering the diameter of the motor belt pulley ; in practice, the machine should be set to make from 80 to 100 strokes a minute.

The next problem was to determine the size of electric motor required for driving the machine. The trial machine was, therefore, connected by belt to a d.c. motor furnished with an accurate ammeter, and on setting the machine to work at full capacity it was found to consume, at most 0.2 amps. at 220 volts.

As a 1/6 h.p. a.c. motor fitted with a thermal overload switch was available, this machine was employed for driving the hacksaw in its final form.

It may be noticed in the photographs that bolts and nuts have been fitted in many places in the machine where rivets would normally be used ; this was done purposely to enable the components to be readily dismantled and if necessary modified during the construction of the machine.

The experimental machine illustrated in Fig. 3 was intended to be used as a test bed for trying out components in course of construction, but as it proved so useful it was mainly employed for cutting up the material used to make the second machine.

No doubt, some workers, when building the machine, will want to introduce modifications, either to alter the general design or to adapt the machine for some particular kind of work, but this should present no great difficulty, as the machine is of simple, straightforward construction.

We would express our indebtedness to Mr. H. Haselgrove for making the patterns and supplying the castings where needed.

Constructing the Machine

When describing the construction of a machine it is not unusual to start with the bedplate or frame and give drawings indicating the positions of all bolt holes and slots, so that this part can be finished ready to receive all the machine

components. It has, however, been thought better to mark-out and drill the baseplate as the work goes along; that is to say, each component as it is finished is mounted in place. This allows the builder, if he wishes, to introduce modifications in the design, and, at the same time, this method ensures that the work is checked at every stage, so that errors, which might add greatly to the difficulty of construction, are thus avoided. Furthermore, the castings are located from datum surfaces and so can be clamped to the baseplate in their correct positions to enable the holes for the attachment screws to be drilled right through.

This method of assembly by stages, also, perhaps, makes the work more interesting and gives better opportunities for hand fitting.

Although there are patient individuals who are content to work by first making all the small parts of a machine, the majority, perhaps, like to get something working at an early stage and leave the detail work until later. Accordingly, the driving mechanism of the machine will be first described, and this will be followed by instructions for making the actual sawing mechanism, together with its mechanical and electrical controls.

(To be continued)

An Adjustable Tool Holder

by W. V. Pagett

HERE is a useful little gadget that can be made in the home workshop to eliminate the necessity of packing-pieces frequently used for adjusting lathe tools to centre height.

Probably most model engineers buy standard size steel from which to grind their tools, and the "cradle" to be described should be made to accommodate this, as no specially-formed shanks are necessary. My plates are 2½ in. square but can be made to suit individual requirements; wood patterns will be needed for the two lower parts, and a casting taken from each in aluminium alloy. This material will be found quite satisfactory.

The main dimension to be noted is vertically from machined face of top slide to centre height, which in my case is $\frac{13}{16}$ in. The combined thickness of the two lower parts should approximate this measure, as on this the normal position of the tool will depend. The soleplate (1) is flat on the underside and concave on top to a radius of 2¾ in. has a drilled clearance hole in the centre for the toolpost bolt. The middle or "cradle"-piece (2) is convex on the underside and flat on top with a square recess on one side to accommodate the tool. The depth is slightly less than the latter in thickness to provide for clamping, and this plate has an elongated hole in the centre.

The top or clamp plate (3) is of steel and necessitates an elongated dished hole in the centre, followed by a half-moon washer and tightening nut; a jack-bolt should also be provided. Both elongated holes should allow about ⅛ in. clearance either side of the toolpost bolt, and also be in line with the tool recess. It will thus be seen that movement of the "cradle" and clamp plate will adjust the centre height of the tool as necessity requires.

It may be mentioned that the curved faces require accurately fitting together, and may with advantage be left slightly apart in the centre, as this will greatly improve stability and grip on the tool. My set-up has given entire satisfaction and proved well worth the time spent in making.

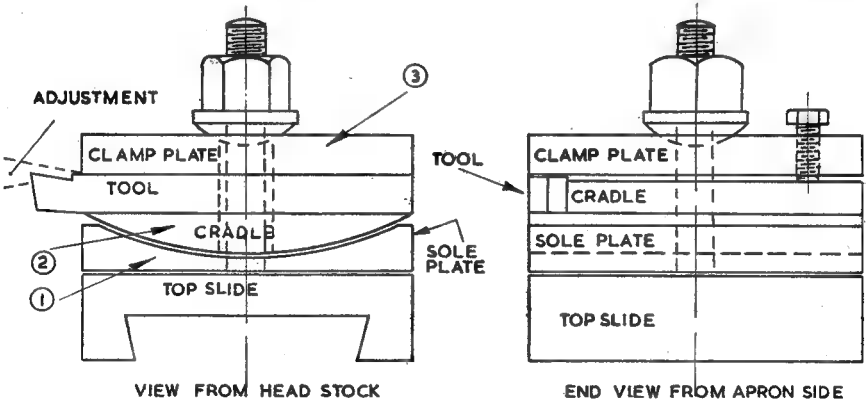

Driving A Lathe by Petrol Engine

by F. T. Leightwood

As my old lathe is rather small I accepted an offer of an old 6½ in. centre lathe for the princely sum of £8. This lathe had a massive flywheel and when treadling hard the mandrel turned at about 600 r.p.m., or, with the back gear in, at 100 r.p.m. or so. These speeds were fine for wood-turning and polishing in "top" and metal-turning in back gear, but it could be awfully hard work and so I decided to use a little power from another source.

Electricity was out of the question so an i.c. engine was the only alternative. A further bargain settled this and so a 250 c.c. motor-cycle came into my possession, complete with carburettor, magneto and gearbox. In order to drive the lathe I welded a steel ring round the teeth of the final drive sprocket of the gearbox which was later set up on a taper-stub-mandrel, to turn the ring true to the bore. They were then mounted between angle irons, the engine by the lower two crankcase bolts and the gearbox by the lug projecting downwards. In order to maintain the correct tension on the chain, a further lug on the side of the gearbox is connected to the angles by slotted strips of ½ in. × ⅛ in. steel.

As the magneto drive is a cycle chain, I decided to use this to drive a fan also, the fan being mounted on an arm bolted to the crankcase and the angle iron, thus being kept quite rigid and also assisting the lower two crankcase bolts to support the engine against the action of the chain. The magneto was mounted on a platform shaped out of 16 s.w.g. steel plate, once again attached to the engine by a crankcase bolt, and the outer ends supported by slotted strips like the gearbox for chain adjustment.

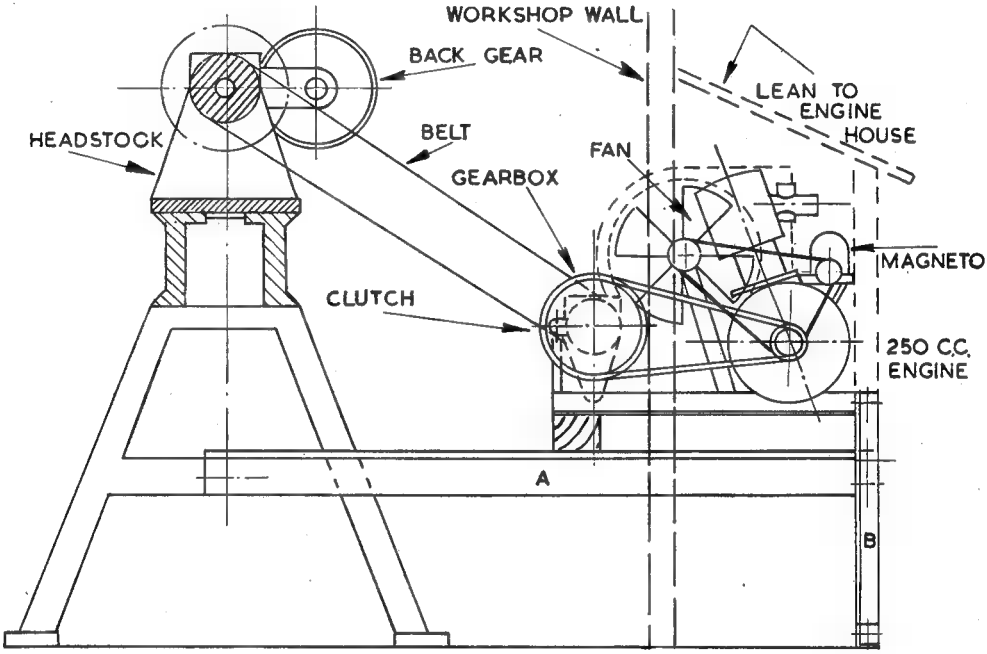

Arrangement of petrol-drive

With the assembly thus completed I set the power unit up as in the drawing, the two long angles *A* are clamped either side of one bearing for the treadle crankshaft, and the outer ends are bolted to the vertical angles *B* which also support the outer ends of the power unit feet. The inner ends of the power unit feet are connected to the angles *A* by long bolts, a wood block being interposed between them to act as a shock-absorber. The reason for this arrangement was that at the time I was unable to obtain any cement and the only way to keep the driving belt in tension was to secure the engine to the only really solid part of the workshop—the lathe.

In order to minimise the noise the engine had to be kept outside and therefore a large hole was cut in the side of the shed and the engine was erected as shown, in a lean-to housing. The gearbox was kept inside the shed so that the

kick-start could be used without going outside, the petrol tank being fitted inside the shed for the opposite reason, i.e., for stopping.

For control I fixed the throttle with an adjusting screw and connected the gear-change and clutch with light angle iron and $\frac{1}{4}$ in. rods to levers mounted at the left-hand side of the lathe bed. All that remained was the exhaust and so for the first try out I used a short length which just served to direct the exhaust away from the shed.

After a general check over to see that all was set correctly, I put the choke in (a large wad of rag), and using the kick-start as a starting handle, I gave her a few swings and away she roared. I found that I could select any gear without crashing and, using a tool in the four-way toolpost I could rough down a piece of wood at what seemed an unbelievable rate and I was soon covered from head to foot with oak-chips. When I shut down after about 10 minutes, however, I found a major snag—the cylinder head was almost glowing. This was easily understood when, after it had cooled, I tried again, this time checking the air-stream from the fan. This I found to be very weak and therefore bigger blades were called for. The fan, by the way, is a bicycle hub, mounted by its spindle and driven (at first) by an 18-tooth fixed sprocket. The blades are attached by $\frac{1}{8}$ in. steel rivets through the spoke hole making five rivets per blade. The new blades that I fitted were much wider although the diameter had to remain the same, and while I had the fan dismantled I decided to fit a smaller sprocket too.

My next run was much better though still not quite satisfactory. The engine still rather inclined to heat up badly on a hot day and also the blades were loosening their rivets due to the vibration. This latter fault was corrected by fitting a bracing strut from the centre of the blades to the ring of holes on the opposite side of the hub.

To complete the cooling, I cut up an old oil drum and fitted it over the fan and cylinder head in the position indicated by the light dotted lines on the drawing, and by using the fan to its maximum effectiveness, the engine can be kept working as long as is required now.

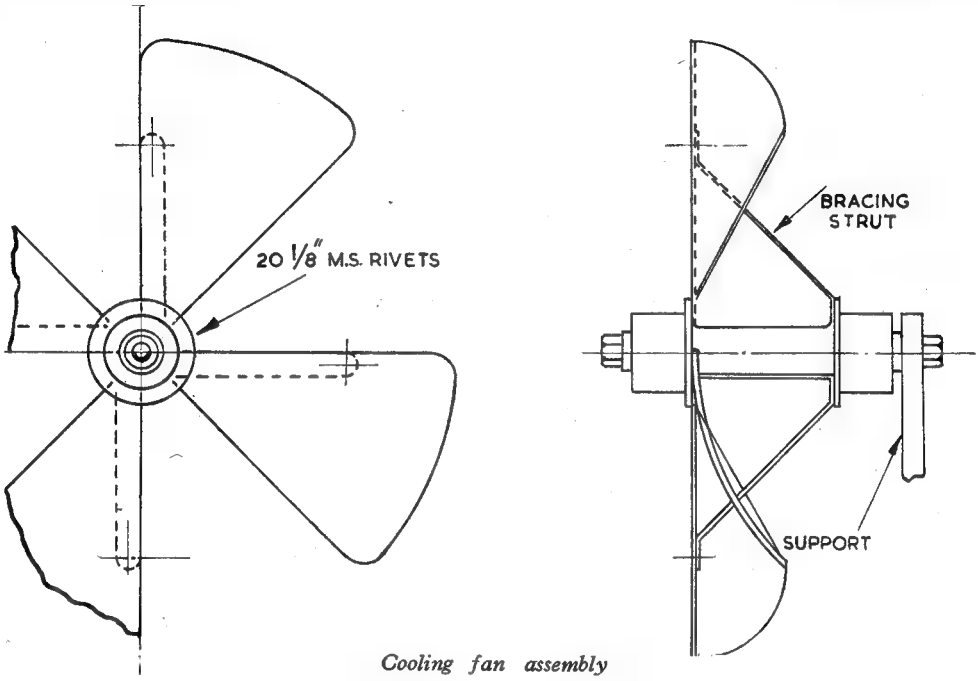

Cooling fan assembly

Re silencing. I am fortunate that, due to the local topography, the nearest houses are out of earshot and there are just open fields on the other side of the shed, but for my own sake I led the exhaust into an old boiler which acts as a pretty effective expansion chamber, although I have been debating with myself on possible improvements like filling the boiler with coke.

Should anyone be tempted to use an engine in this way I should also like to add that I have since found the clutch control is not really required as the gears can be selected without grinding by a quick, decisive movement of the gear lever, even straight into top gear, a feature very few lathes possess. The only difficult change is the back gear, which requires the usual movements and, of course, the gearbox in neutral!

I am still not completely satisfied; I would like an even wider range of speeds and in order to reduce the vibration I would like to mount the engine independently. To this end I have schemed up a countershaft to enable me to make use of the other steps on the headstock cone pulley (I use only one at present). This would give 18 changes and by cementing the engine mounting separate to the legs of the lathe, should reduce vibration.

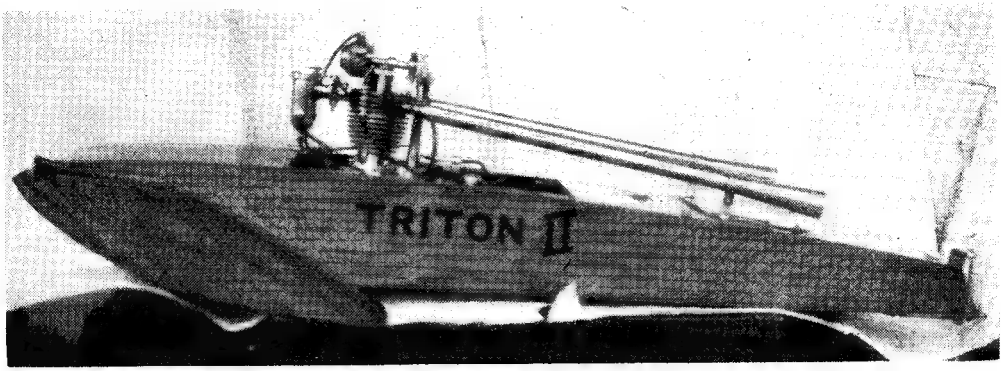

Building "TRITON II"

An Experimental Hydroplane

by G. D. Reynolds

IN THE MODEL ENGINEER No. 2517, Vol. 101 dated 18th August, 1949, I had an article published entitled, "A 10 c.c. Overhead Camshaft Petrol Engine," and I mentioned that I intended trying the engine out in a hydroplane. The engine is now modified to 15 c.c.

At long last the engine was completed. Modification after modification was carried out until I had enough parts to make another engine, and it is very probable that I shall have even more parts by the time the engine and hydroplane are satisfactory.

I decided on a surface propeller hydroplane, made several sketches on paper all over the front-room floor, and at last arrived at a design to suit. Once again up to the "workshop."

The first job was the engine bearers made from oak, the only wood obtainable at the time. These were routed out in my centre lathe to H-section and drilled for lightening. The method I used to produce the bearers was as follows.

First, the bearers were cut to shape, making sure they were parallel. With an end pad in the tailstock of my lathe, I clamped two small parallels on to the pad, spacing them the width of the bearer. By placing an end-mill in the headstock and bringing the tailstock up to it, I started a cut on the bearer, which was placed between the parallels. When the cut was the required depth, the bearer was fed between the parallels, making sure that it was held tight against the end-pad. I then produced a series of equally spaced grooves. By turning the material over and repeating this operation on the other side, the result was a bearer H-sectioned at intervals along its length, and it was next drilled to lighten to the minimum.

Both bearers were next clamped to a board and lined up. The skeleton hull was then produced, formers from $\frac{1}{8}$-in. ply, and the stringers from $\frac{1}{4}$-in. × $\frac{1}{4}$-in. spruce, all glued with Casein cold water glue. The completed skeleton was covered with 3/64-in. plywood on the bottom and 1 mm. ply on the sides and top, glued on and brass pin nailed, clinching over on

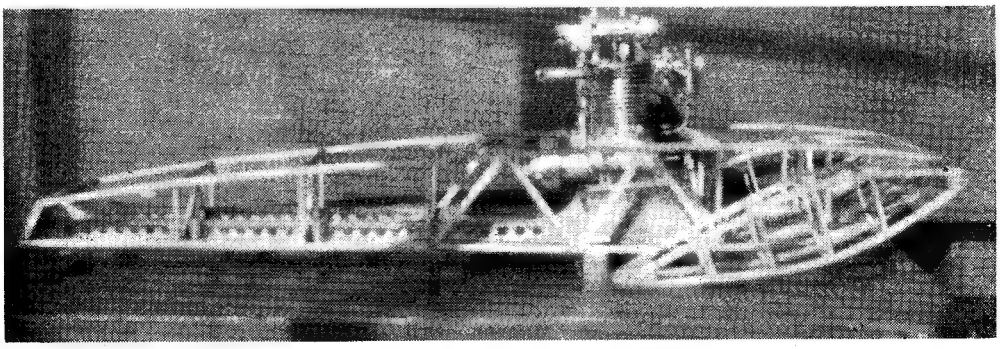

Photograph showing hull construction

the inner side. Three coats of varnish were applied to the inside before the top was fixed in position.

The sponsons were made separately and were fitted to swivel to allow setting on the planing angle. The whole of the hull was rubbed down and given three coats of clear varnish.

On the first tests in the pond, the boat did not get away owing to my lack of experience in the way of launching these surface-propelled boats and also the engine lacking the correct tuning for load, although I thought I had all this worked out. I home like a little dog, tail between my legs, but not beaten. Once again to the workshop, this time I made five

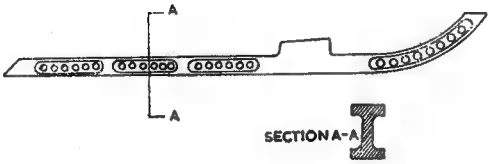

Main engine bearer

propellers of various pitches and blade areas. After giving the engine various bench tests, I decided the valve timing was not all that it could be, this meant new cams. The method I used to make these may be of interest, considering I have no profiling equipment.

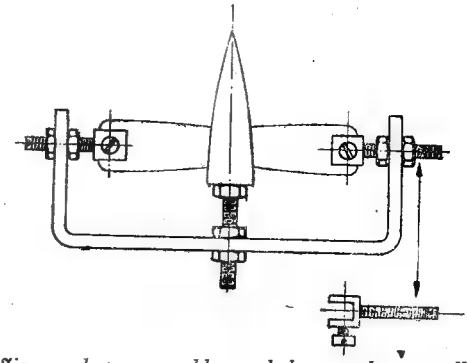

Jig used to assemble and braze the propeller

Drawings were made of the new cams 10 times their size, then cardboard cams were cut out and a mock-up valve assembly was made. I noted the movement of the new cams on the valve assembly, and when I had arrived at the correct overlap and riding of the cams, I made two 10-1 master cams in dural plate, one exhaust and one inlet, I then divided the master cams into degrees and the diameter was divided up into known sections with a series of circles. Next, I made two cam blanks and fitted the first on a spigot and held it in my home-made dividing-head on the cross-slide, noting the variations of lift per

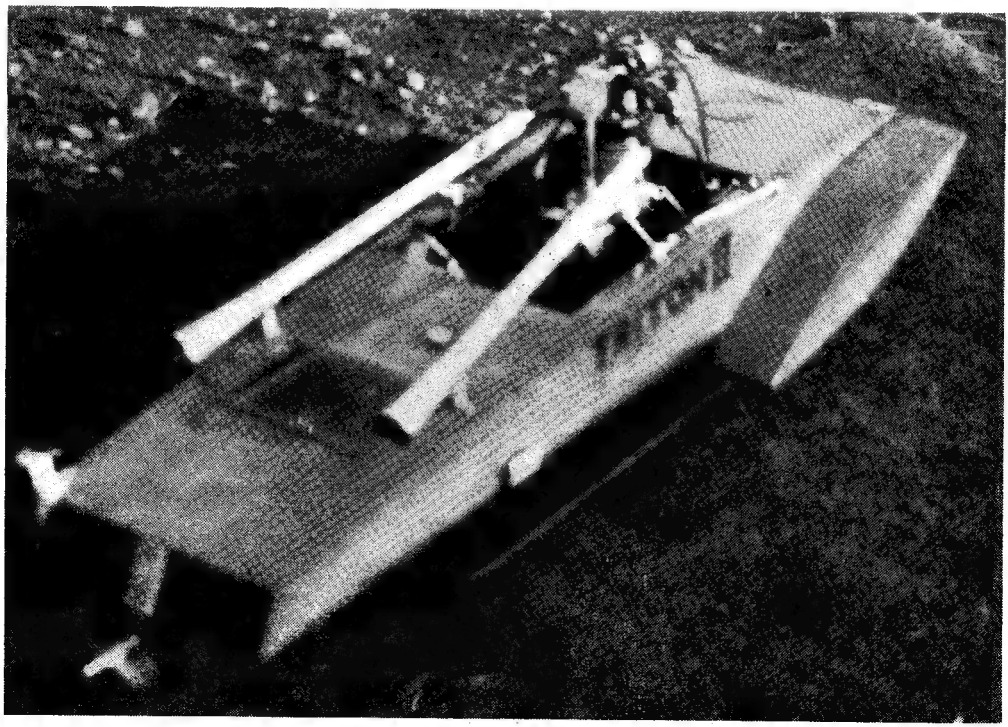

degree rotation on the master cams. I proceeded to end-mill the profile by winding the cross-slide to the required amount per degree rotation of the cam blank.

When the inlet and exhaust cams were completed, I had to file them up smooth, and after

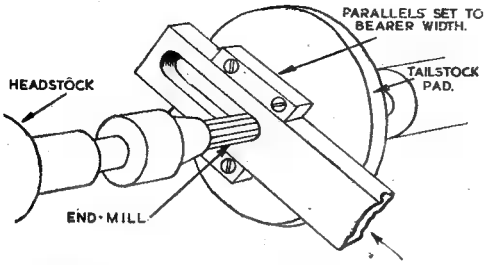

Method of routing "H" section in engine bearers on centre lathe by hand feed

checking the performance on the engine, they were hardened and fitted to the cam shaft. The error on the overlap in the machinery was 2 deg. on the inlet and 3 deg. on the exhaust. This was corrected with a file ; as luck had it, the error was plus !

The valve setting is as follows :—

Inlet opens 20 deg. *BTDC*, closes 50 deg. *ABDC*. Exhaust opens 50 deg. *BBDC*, closes 20 deg. *ATDC*. The performance was definitely better with these new cams.

Once again to the pond. This time I got the boat going by hurling it at the start to get the flaring on the surface. The engine nearly cut out, but picked up again before the boat sank too deep. No exceptional speeds, approx. 29-30 m.p.h., but satisfaction.

I have had a very happy time making this boat and still have many more months of testing, etc. before I shall know if this design has anything in it.

The following are a few details of the hydroplane and engine : The hull was made a little large, as I wish to use it for experimental purposes. Hull 33 in. long, 12½ in. maximum beam, 4 in. maximum depth, two sponsons 13 in. long, c.g. line 2 in. aft of sponsons, propeller 3 in. diameter, 4½ in. pitch. Petrol pumped to carburettor by diaphragm pump. Oil pressure fed to crankshaft by gear pump driven off the propeller-shaft by 8-1 reduction worm. Sparking plug, ⅜ × 24 K.L.G. Coil Ignition.

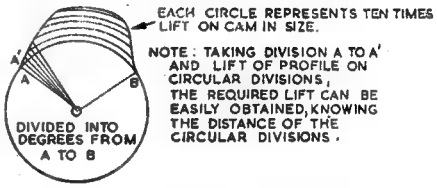

Master cam blank divided up to study lift and fall of cam profile before machining cams

This boat has made me take my hat off to the builders of boats like *Beta*, *Faro*, *Sparky*, etc., for the time it must have taken to get them running like they did, and the patience needed.

Students' Drawing Instruments

We have recently examined and tested a set of drawing instruments, submitted for our inspection by the Aero Spares Co., 71, High Holborn, London, W.C.1. The set comprises seven complete instruments, namely, one each 3½ in. bows with divider, pencil, and combined pencil and pen points, 5¼-in. compasses with similarly equipped points, and one ivorine - handled ruling pen. All the instruments are of sound design and construction, with adjustable friction joints, detachable points, and plated finish with blued bow springs ; they are supplied in flat lined cases covered in dark blue letherine, but any of the instruments can be obtained separately. We are of the opinion that these instruments are practical and serviceable, and would form an excellent presentation set for a student or amateur draughtsman ; the price, according to present-day standards, is very attractive. We can confidently recommend this set.

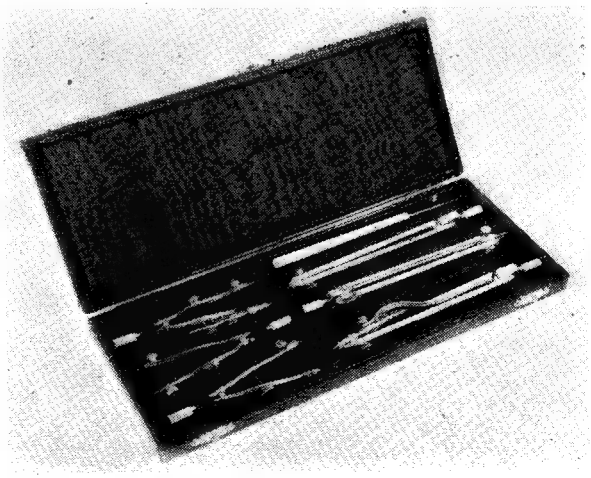

Novices' Corner

Removing and Replacing Bushes

THE removal and replacement of bearing bushes is an operation which needs to be performed methodically if damage to both the bearings and their housing is to be avoided.

Driving out the bushes with a hammer and a drift must be avoided, for this may cause damage, and it is particularly important, when fitting new bearing bushes, to avoid bruising either the bushes themselves or the housings in which they fit.

The professional workshop uses a press to remove and replace bushes and to carry out other work of a similar nature, but presses are seldom found in amateur workshops. The owners of these workshops must therefore resort to other methods to achieve the same result.

The tool most commonly used is the drawbolt. This tool, when correctly applied, will both extract and replace bushes, and the application of the device for the removal of a plain open-end bush is shown in Fig. 1.

It will be seen that no elaborate components are needed. The bolt is a standard commercial article of suitable length, whilst the distance collar, the bridge-piece and even the step collar, by means of which the drawbolt is kept central in the bush, are usually to be found in the workshop scrapbox.

It is best to select a bolt of relatively large diameter, otherwise the threads of both the bolt and the nut may be stripped. The internal diameter of the distance collar is of no particular significance, provided that it is greater than the outside diameter of the bush, but the collar must be longer than the bush to allow the latter to be pulled clear from its housing.

To use the device, the various parts are assembled together in the manner shown and the nut is turned with a spanner. The head of the bolt then draws the bush upwards.

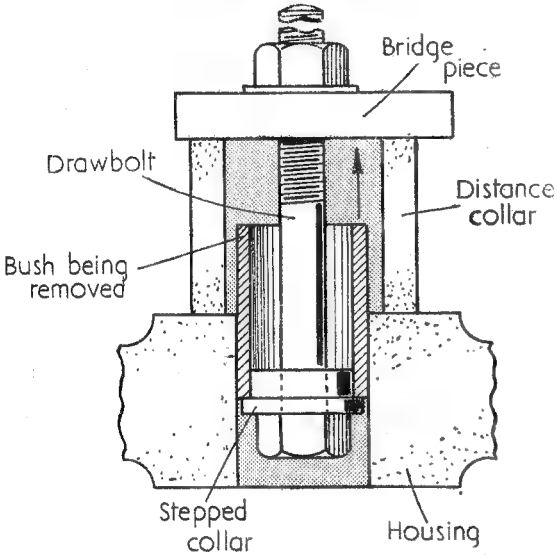

Fig. 1

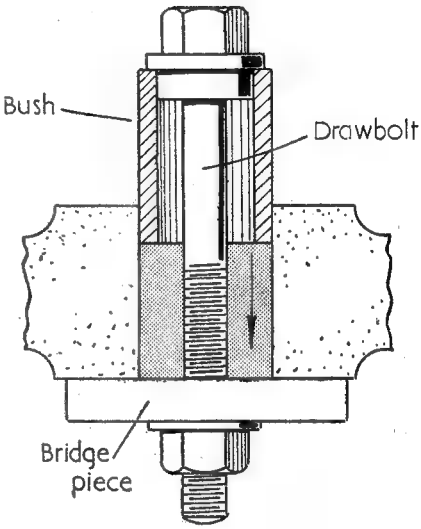

Fig. 2

When replacing a bush by this method the distance-piece can be omitted, unless it is desired to allow the bush to protrude on both sides of the housing, and the arrangement of the drawbolt parts is as shown in Fig. 2.

If a number of bushes, all projecting the same amount, are to be fitted, a specially made recessed distance-piece may be used as shown in Fig. 3.

Using the Bench Vice to Remove and Replace Bushes

Provided that care is taken to prevent the work being damaged, the bench vice may sometimes be used to remove and replace bearing bushes.

The employment of the vice for this purpose will, however, need a second pair of hands to assist in aligning the various parts in their correct position. The arrangement of the various parts, as seen from directly above the vice, is

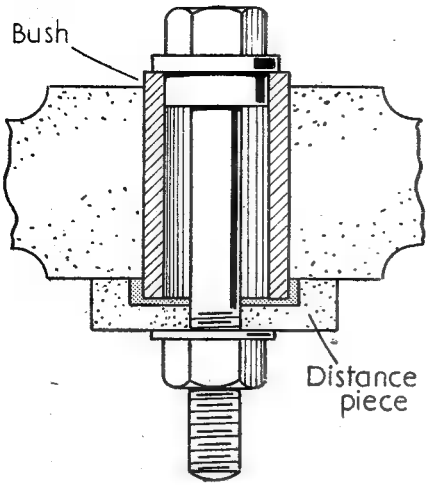

Fig. 3

shown in Fig. 4. The method of removing the bush is shown at *A*, while at *B* the bush is seen in course of replacement.

It will be observed that a dolly, slightly smaller than the bore of the bearing housing, is used to push the bush out and that a distance-piece is interposed between the jaws of the vice and the bearing housing to allow the bush a clear passage.

To replace the bush the dolly only is needed. In both operations it is essential that the work should be square with the face of the vice jaws, and it is also advisable to turn a small shoulder on the dolly to make sure that, during its passage through the housing, the dolly remains central.

Of course, in all operations of this nature, the work must be protected by suitable vice clams, or the rough surface of the jaws will damage the parts.

The Removal of Bushes from Housings which have a Closed End

The removal of bushes from housings which are open at one end only is a somewhat more difficult operation than those which have been described previously, for no direct access to the end of the bush can be gained. Some mechanics recommend filling the bush half full with oil,

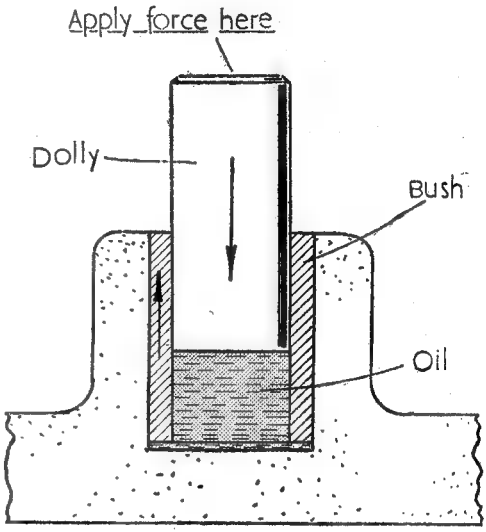

Fig. 5

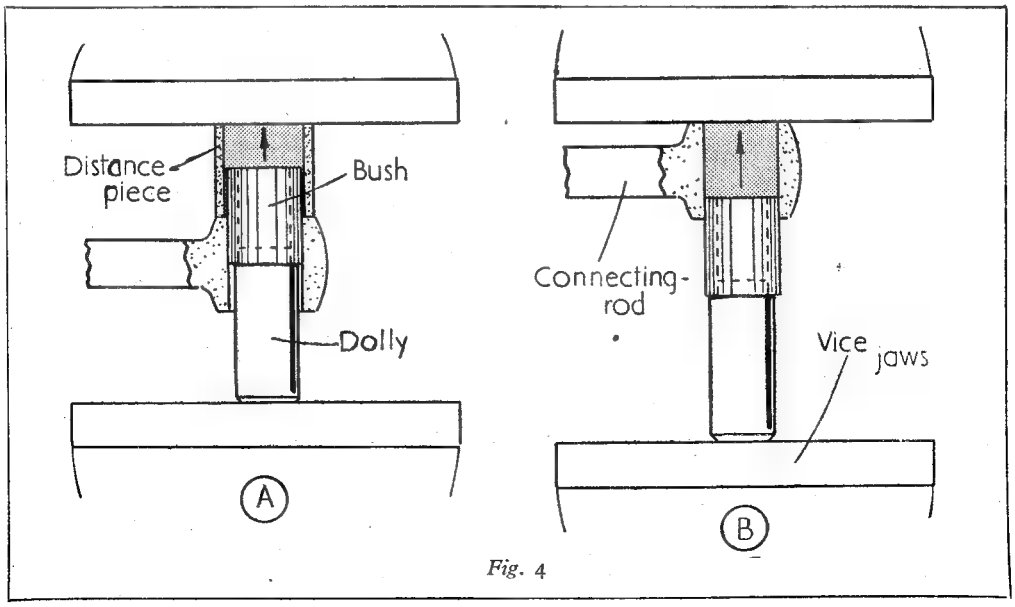

Fig. 4

then, as seen in Fig. 5, inserting a close-fitting dolly and applying pressure either by striking with a hammer or by squeezing in the vice. The oil will then press the bush upwards. This treatment will suffice for bushes which do not extend to the very bottom of the housing, but it may prove to be useless for bushes which do extend to the full depth of the bore and so prevent the oil getting beneath them.

Small bushes may sometimes be extracted by sweating in a screwed stud and using it as a drawbolt in the manner previously described for withdrawing bushes from open housings.

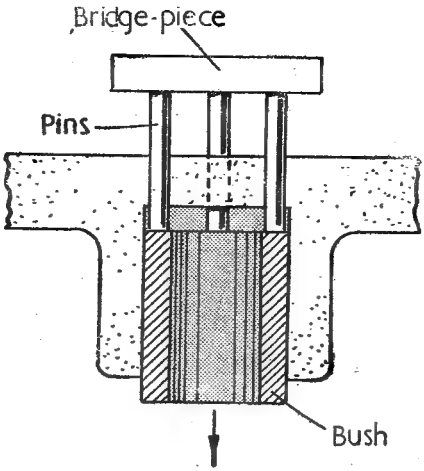

Fig. 6

Another method of removing bushes from blind holes is by drilling three holes through the back of the housing, as [illegible] in Fig. 6, so that steel pins can be inserted. These pins are then covered by a bridge-piece and, after supporting the work in a suitable manner, pressure is applied to the bridge by squeezing in the vice, thus forcing the bush out of its housing. The holes are afterwards tapped to receive grub-screws so as to exclude dirt.

The Potts Tailstock Turret

We illustrate herewith a useful lathe fixture recently introduced by Messrs. G. P. Potts, Ruthin Road, Denbigh, N. Wales, consisting of a six-hole turret of the type intended to fit the socket of the tailstock barrel, and provided with a No. 2 Morse taper shank for that purpose. The turret head is inclined at an angle of 30 deg. to the shank axis, and the stations are located by means of an index plunger, holes being drilled to take tool shanks or adaptors ⅝ in. diameter, to come into exact alignment with the tailstock axis in working position. This is by no means a new type of turret, but it is of recognised merit for use in cases where multiple drilling, counterboring, tapping and die-threading operations are called for in repetition work, and it can also be used with light hollow-mills or box tools for running down operations. In common with all the products of the above firm, it is very well made and finished, and reasonably priced.

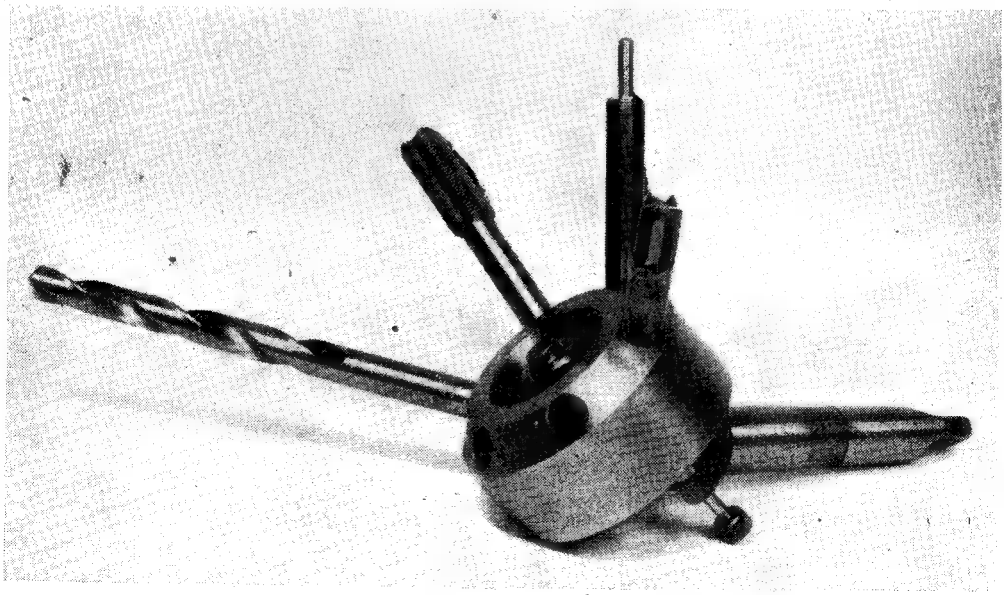

"PAMELA" by "L.B.S.C."

A 3½-in. Gauge Rebuild of a Southern Pacific

IF the ears of a certain gentleman now resident in the Emerald Isle didn't burn during the last few days, it is no fault of your humble servant! In scheming out the boiler for *Pamela* I was up against two spots of bother, viz. keeping to the original outline and dimensions—we are supposed to be using the original boiler in our imaginary rebuild—and accommodating my "tried, tested, and not-found-wanting" arrangement of firebox and tubes, to fit nicely inside the given shell, without making any radical alteration. However, it was managed at last, as you'll see from the accompanying illustrations. Unlike the taper boilers on the Great Western, the spam-can barrels taper both at top and bottom; that didn't make any difference, but the shape of the outer firebox, with its curved throatplate, didn't allow of my usual inner firebox being fitted. I altered the throatplate to a flat one, without altering the outside appearance of the shell to any appreciable extent, and then tried my firebox in it; but then the trouble arose, that the sides of the Belpaire wrapper, where they slope back from the barrel, couldn't be stayed without driving the stays into the combustion chamber, and you couldn't get at the ends to put the nuts on. I got over that by departing from the vertical front plate of the firebox, and substituting a sloping one, to match the slope of the end of the wrapper sheet. I prefer the vertical front plate for the inside firebox, for two reasons; it is easier to make and fit (very important that) and does away with the need for a front section of foundation ring, thus slightly increasing the grate area; secondly, it allows a good body of water in one of the worst situated, yet one of the hottest places in the whole boiler. Still, as the old saw says, "needs must as the devil drives" (it doesn't say *what* he drives, though it certainly isn't a locomotive, even though it is rumoured that he has a fire big enough to keep a spam-can in steam) and we can't have everything we want in this benighted world, otherwise I wouldn't be writing these notes!

Made From Sheet Metal

The boiler, as shown, won't be any more difficult to build, than that for *Hielan' Lassie.* I believe that two at least of our advertisers can supply taper barrels rolled from seamless tube; and even if these are not obtainable, a taper barrel can easily be made from sheet metal. The sloping throatplate is first made flat, then the flanges are nicked, and the lower part bent backwards, the end of the barrel being sawn to suit; the bend in the backhead is made in similar fashion. The firebox wrapper has straight sides and a flat top, so that should be "a piece of cake." The sides and crown of the firebox, and the combustion-chamber, are made in one piece from sheet copper, with a make-up piece brazed in at the front end, like the throatplate of a round-backed boiler. The coffee-tin-lid tubeplate carries four superheater flues and thirteen smoke tubes, which are $\frac{7}{16}$ in. diameter; whilst they are just within my limit of length for $\frac{3}{8}$ in. diameter, the slightly larger size gives a more symmetrical arrangement. You can use four $\frac{1}{4}$-in. elements in the superheater, or eight $\frac{3}{16}$ in., just as you please. All fittings and mountings are to my usual specifications. With the grate area, firebox volume and tube heating surface of this boiler, it ought to steam on a mixture of granite chips and tarmac, though some of the stuff sold as coal at the present time, might cause it to fizzle out. Well, let's get busy.

Taper Boiler Barrel

If a seamless taper barrel isn't available, the barrel can be made from a piece of ordinary tube, or from sheet. In the former case you'll need a piece of 5 in. diameter 13-gauge copper tube about 16 in. long. Cut a V-nick out of it a shade over $1\frac{1}{2}$ in. wide at one end, tapering down to what the kiddies call "freezo" at the other. Anneal well, close up the gap, which will make the tube go taper, clean the edges, and rivet a butt strip about $\frac{1}{2}$ in. wide, down the inside, to hold the joint whilst being brazed. The strip need be only $\frac{1}{16}$ in. thick, and just enough rivets put in to hold the bits together. Tip to inexperienced coppersmiths: if you bevel the edges a little, so that when put together, they look like a V, the brazing material will run ever so much better, and if the groove is filled up, the joint will be stronger than the parent metal. Same applies to bronze-welded joints. I found, when first testing one to destruction, for the sake of curiosity and a desire for first-hand information, that the metal each side of the joint gave way and left the joint itself intact.

If sheet metal is used, a piece of 13-gauge soft sheet copper approximately 16 in. square, will be required. Cut a taper strip off each side, $\frac{3}{4}$ in. wide at one end, tapering to nothing at the other; bend this around anything you may have handy, of suitable diameter, and lap over the edges until the diameter is $4\frac{1}{2}$ in. at the smaller end, and 5 in. at the larger. Put a few rivets through the lapped part to hold it whilst brazing; and don't forget that clean contact surfaces, slightly roughened, make the best brazed joints.

Throatplate

The throatplate is knocked up from $\frac{1}{8}$-in. or 10-gauge sheet copper, over an iron forming plate. Some of our approved advertisers are supplying these formers ready for use, cast in iron; samples I have received, for other boilers,

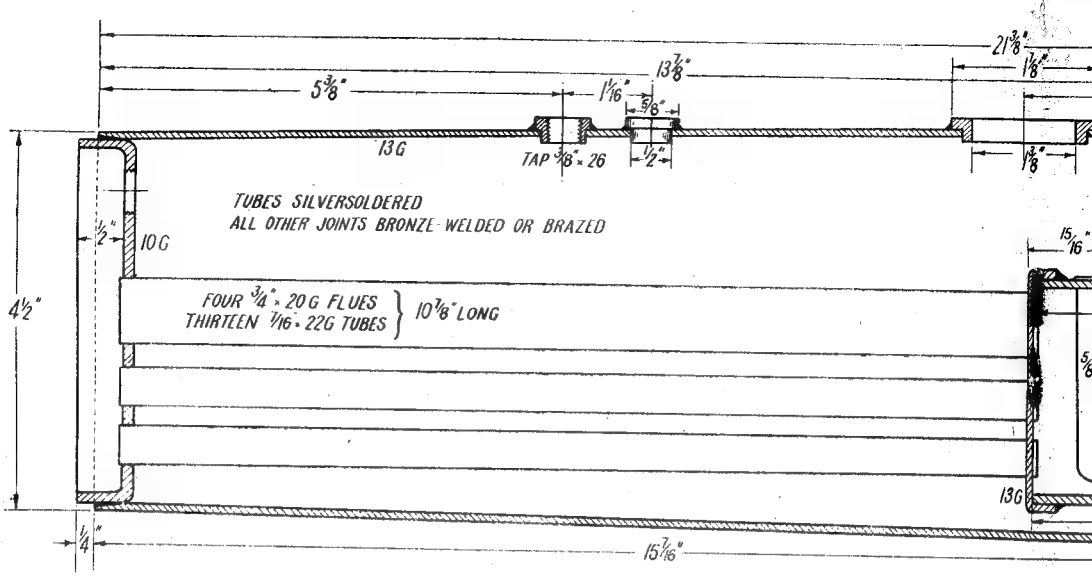

Longitudinal section of boiler for "Pamela"

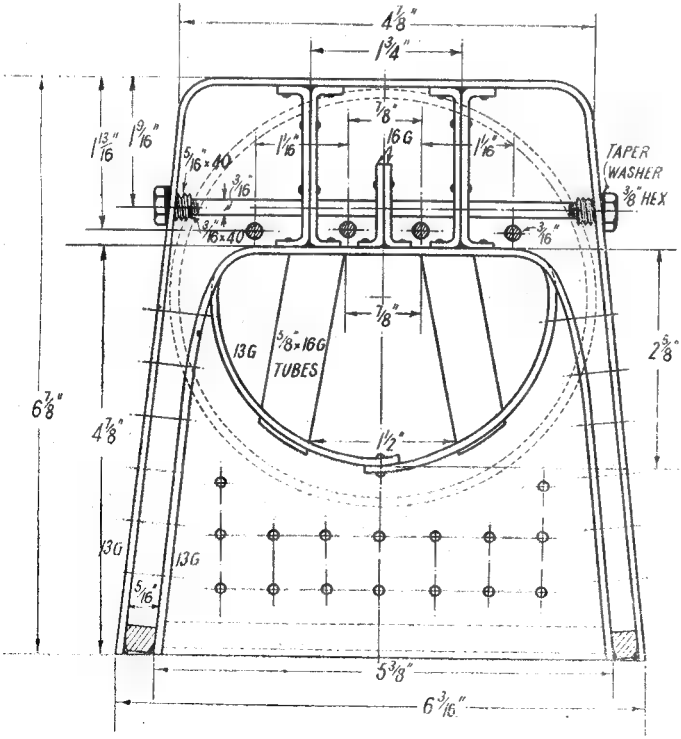

Section through firebox

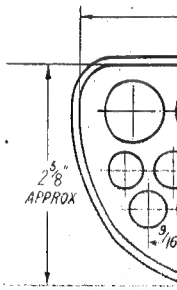

Combustion

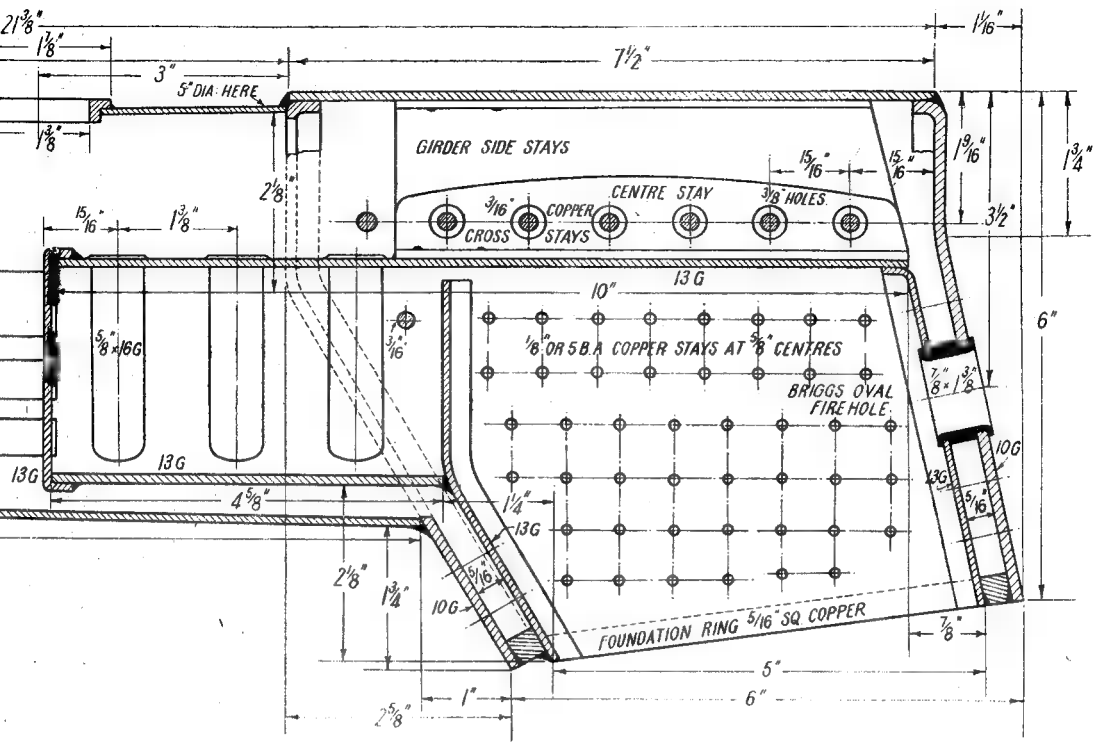

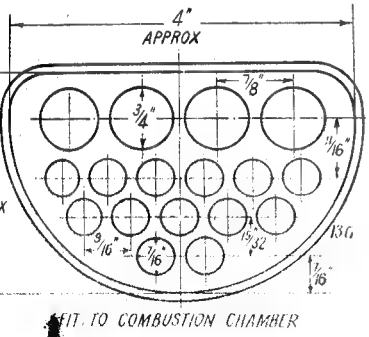

Combustion chamber tubeplate

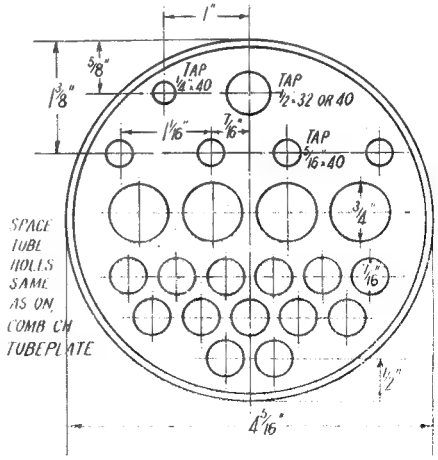

Smokebox tubeplate

are O.K. and save a lot of sawing and filing. They can, however, be cut from $\frac{1}{4}$-in. iron or steel plate without too much muscular fatigue (says Harley Street) if a coarse-toothed sawblade is used, about 14 teeth per inch, and plenty of cutting oil applied to the blade with a brush. This eases work, and doubles the life of the blade. For dimensions of the former, make it $\frac{3}{16}$ in. less all around, except at bottom, than the overall dimensions given in the cross section through firebox. This allows 3/32 in. for thickness of wrapper, and a similar amount for throatplate flange; although this is $\frac{1}{8}$ in. to start with, the severe bashing, and the subsequent cleaning-up with a file, will account for an odd 1/32 in. or so, therefore the former plate doesn't need to be too small. Inexperienced coppersmiths should bear in mind that [illegible] as ever the metal begins to go hard, re-anneal it. For those who need them, full instructions for plate flanging will be given in the notes on how to build the boiler for *Tich*. They are all done the same way; incidentally, I find it easier to flange $\frac{1}{8}$-in. copper plates than $\frac{1}{16}$-in., as there is less tendency to buckle on curves and corners.

The size of the piece of copper needed, is obtained simply by laying the former plate on the copper, and scratching a line all around, except at bottom, $\frac{5}{16}$ in. away. The piece is then sawn out, clamped alongside the former in the bench vice, and the projecting flange beaten down over the edge of the plate with a fairly heavy hammer. Trim it up with a file *after* flanging; it's a sheer waste of time to do it before!

Mark on the flanged plate, the vertical centre-line; on this, at $2\frac{1}{2}$ in. from the top, make a centre-pop, and from that, scribe a circle $4\frac{3}{4}$ in. diameter. This has to be cut out. Failing any mechanical sawing facility, the circle can be cut out in fretwork style, with a metal-piercing or coping saw blade in an ordinary fretsaw frame. Talking of fretwork, an esteemed friend once photographed his *Fayette*-type engine, stuck a print on a piece of fretwood, fretsawed it out, and sent it to me for a valentine, with a little compliment on the back. I treasure that very much, and it hangs on my workshop wall. Otherwise, drill a circle of holes inside the marked line, break out the piece, and file up the ragged edges. I don't suppose many home workshops have a lathe big enough to admit of setting up the plate in the four-jaw, and carving out the circle with a parting-tool; but that would be an easy and quick way of doing the job.

Next, at $2\frac{1}{8}$ in. from the top, cut a V-nick in each side flange; then bend the plate backwards, as shown in the dotted llnes in the longitudinal section of the boiler. The "back set," from the place where the bend commences, to the extreme bottom of the throatplate, is $2\frac{5}{8}$ in. Get this dimension somewhere near the mark, or the boiler won't fit nicely against the back end of the main frames.

Firebox Shell or Wrapper

The wrapper sheet is cut from 3/32-in. or 13-gauge sheet copper; and as the only bends are the top corners, which can be done over a bar in the bench vice, there shouldn't be any difficulty in shaping it. This is where a bending brake comes in mighty handy; my Diacro would do it in one flick of the handles. But as the front and back edges are both cut to fancy shapes, as on the full-sized spam-cans, I strongly recommend all *Pamela* builders, whether they are experienced or not, to use a "feminine working drawing," to wit a paper pattern, for getting the exact size and shape of the piece. You can spoil a dozen or more pieces of paper and not be a red cent poorer; but copper is too expensive to risk! Get a bit of thick brown paper, about 19 in. long and 9 in. wide; borrow a pair of scissors from the guidwife, girl friend, or "mum" as the case may be (see her smile when you say you need them to cut out a paper pattern!) and go right ahead. Bend the paper over the throatplate flange—a couple of wire paper-clips, suitably bent, will hold it to the flanges at the bottom, though spring paper clips would be safer. First snip off the two triangular projections in front of the throatplate, flush with the latter. Next, cut off the bottom to a length of 6 in.; at the back end, mark a point $\frac{7}{8}$ in. from the bottom, and cut upwards to it, which will give the correct slope from the throatplate to the backhead. Then cut off the top, at $7\frac{1}{2}$ in. from the front end, continuing vertically downwards at each side, for a distance of $1\frac{3}{4}$ in. Finally, cut upwards at each side, on the slant, from the bottom corners, to meet the bottom ends of the two vertical cuts, and there is your pattern. Tip: grind the scissors, or anyway give them a touch-up on the oilstone, and wipe them perfectly clean and dry before handing them back to their owner. You may need to borrow them again; and, as I have remarked on previous occasions, a nod is as good as a wink to a blind horse!

Paper Patterns

The dressmaker friend of my childhood days laid her paper patterns on the material—she pinned them to it if they were big—and cut around them with a big pair of scissors, allowing so much extra for seams and joining. We can't do exactly the same, but we can follow the principle by laying the pattern out flat on a sheet of 3/32-in. or 13-gauge copper, and marking around it. No extra need be allowed for length, but allow a little extra depth at either side, to make up for the difference between the thickness of the paper and the thickness of the metal in the bends at the top corners. If the copper is at all hard, soften it by heating to red and plunging in cold water. If you have a bench shear, it is easy work cutting the sheet to shape, but if not, saw it. A saw with about 22 teeth per inch will cut the copper very easily if lubricated with cutting oil. Some folk use a hammer and chisel, but it is a method I don't recommend. As to the bending, that can be done by putting a bit of round bar in the bench vice, with enough projecting from one side, to reach the full length of the wrapper. It is a good wheeze to take out the hardened jaws (usually held by two screws in each) and put the bar in the recess; it won't slip down in that case! If the wrapper sheet is placed over the bar at the required spot, and given a good hearty press down at each side, the result should be a clean even bend. I had no

difficulty in doing them thus, before I received the bending machine ; and I guess I'm a bit older than most folk who are building *Pamela*. It is physical condition, not years, that counts in human beings and locomotives alike—old *Ayesha* reckons that she can show any 2½-in. gauge passenger engine how to deliver the goods !

First Stage of Erection

Rivet the wrapper sheet to the throatplate flange with just enough 3/32-in. copper rivets to hold it in close contact. Don't have the edges of the wrapper flush with the surface of the throatplate, but let the latter stand just proud of the edge. The next item is rather ticklish, but only needs a little care. See that both ends of the boiler barrel are nicely squared off ; then, at the larger end, mark off a place 1 9/16 in. from the end of the barrel, keeping the joint at the bottom. With a fine-tooth saw, cut straight down for 2¼ in. bare depth. This is marked 2⅛ in. on the drawing, but if you take a second look, you'll see that this measurement is from the inside of the barrel. Now turn the barrel upside down ; and starting from the extreme edge, where the joint is, saw diagonally to meet the bottom end of the vertical cut. The resulting " step," when butted up against the sloping front of the throatplate, should fit fairly closely, and just nicely cover the hole. If it doesn't, judicious application of a file will do the needful. The edges need not be smooth ; leave them all scratchy, as this kind of surface forms a much better key for the brazing material.

Owing to the shape of the joint, a stepped ring cannot be used to join the barrel to the throatplate ; it is unnecessary, anyway. Although I specify one where the joint is straight, as on a G.W. boiler, it is merely to keep the two parts in position for an amateur or inexperienced coppersmith to braze up. All I do personally, is to stand the firebox shell on end in my brazing pan, stand the barrel on it without any fixing whatever, and get to work with my oxy-acetylene blowpipe and a stick of merry old Sifbronze. The barrel and wrapper never part company any more. Any reader who can use a blowpipe, can do exactly the same with *Pamela's* barrel and wrapper. Those who will have to rely on ordinary brazing, set the firebox shell vertically in the brazing pan, and very carefully stand the barrel on the throatplate in the correct position. If the barrel shows any inclination to shift, roll up a bit of asbestos millboard, put it in the hole in the throatplate, and put the barrel over it. Anoint the joints with wet flux, and go ahead in exactly the same way as I shall be describing fully for the learners who are building *Tich* ; next week, if all's well.

For the Bookshelf

The Live Steam Book by " L.B.S.C." (London : Percival Marshall & Co. Ltd.). 216 pages, size 6 in. × 9 in. Profusely illustrated. Price 12s. 6d. net.

It is almost exactly twenty years ago that *Shops, Shed and Road* was published and rapidly became a " best seller " ; the first edition soon sold out, but a combination of circumstances prevented a reprint being made. Meanwhile, the demand for it continued to grow, and many advertisements appeared asking for copies.

The Live Steam Book, however, has now come to replace the former popular treatise, and we imagine that a second edition will soon be necessary. Like its predecessor, it is not a collection of notes on how to build miniature steam locomotives ; it is, however, full of instruction and advice on how to make fittings and parts which can be used on any type of small steam locomotive. These include such items as oil burners, injectors, pumps, water-gauges, whistles, safety-valves, valve-gear, mechanical lubricators and other miscellaneous details.

The notes are written in the light of up-to-date ideas and experience, and in the style which has made " L.B.S.C." known in every corner of the world where the construction and operation of small steam locomotives are practised.

The book is, for the most part, illustrated by line drawings and sketches of the kind which is so familiar to readers of " L.B.S.C.'s " weekly articles ; but, in addition, there are reproductions of photographs of some of the best known of " L.B.S.C.'s " own locomotives, including *Jeanie Deans*, *Ayesha*, *Helen Long*, *Fayette* and *Ancient Lights*, while there are several useful close-up views of valve-gears, backheads and the like.

The general arrangement of the contents is excellent, and the production is highly satisfactory.

We are glad to note that the late Mr. Percival Marshall's original foreword to *Shops, Shed and Road* is reprinted in this new book, because it so admirably prepares the way for what follows. Some of the constructional methods described may not find universal favour, but the fact should not be overlooked that they are intended primarily for constructors whose workshop facilities, financial resources and practical knowledge are strictly limited. From such people alone, this book is certain to meet with unqualified approval.

A Three-Throw Plunger Pump

by John C. Snelling

BEING a civil engineer and often using pumps up to 12 in. centrifugals, I always desired to possess a good model pump, one that would be of use for car washing and garden watering.

Casting back over the years I remembered the excellent series on pumps by H. Addison in THE MODEL ENGINEER of August-September, 1915, and I selected the design for the three-throw plunger pump. It is $1\frac{3}{8}$ in. × $1\frac{3}{8}$ in. × $1\frac{3}{8}$ in. × 2 in., having a capacity of three gallons per minute at 60 r.p.m. at 100 lb. per sq. in. The writer warned would-be makers of the work involved, the crankshaft in particular being a heavy job; apart from this, the lining up of cranks, guides, barrels and manifolds required care, especially as the work was of a spasmodic character. Months often passed between parts; however, all was well and everything fitted on final assembly without titivating.

A start was made on the patterns on the day war commenced, the idea being an emergency fire pump for the house; alas for intentions, it is only now finished! Although I had possessed several lathes before the 1914 war, at the commencement of pattern making I had to make a wood lathe for the job. Later I came by a

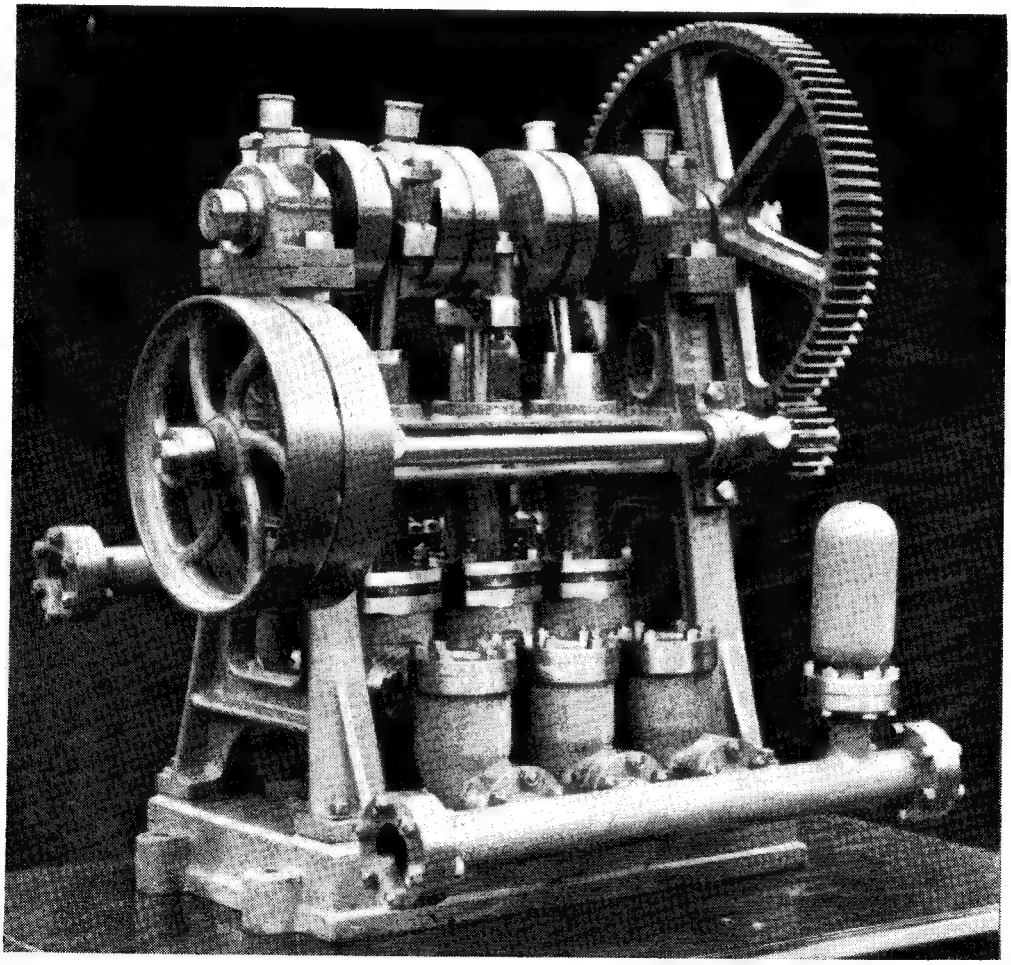

Suction side of the three-throw pump

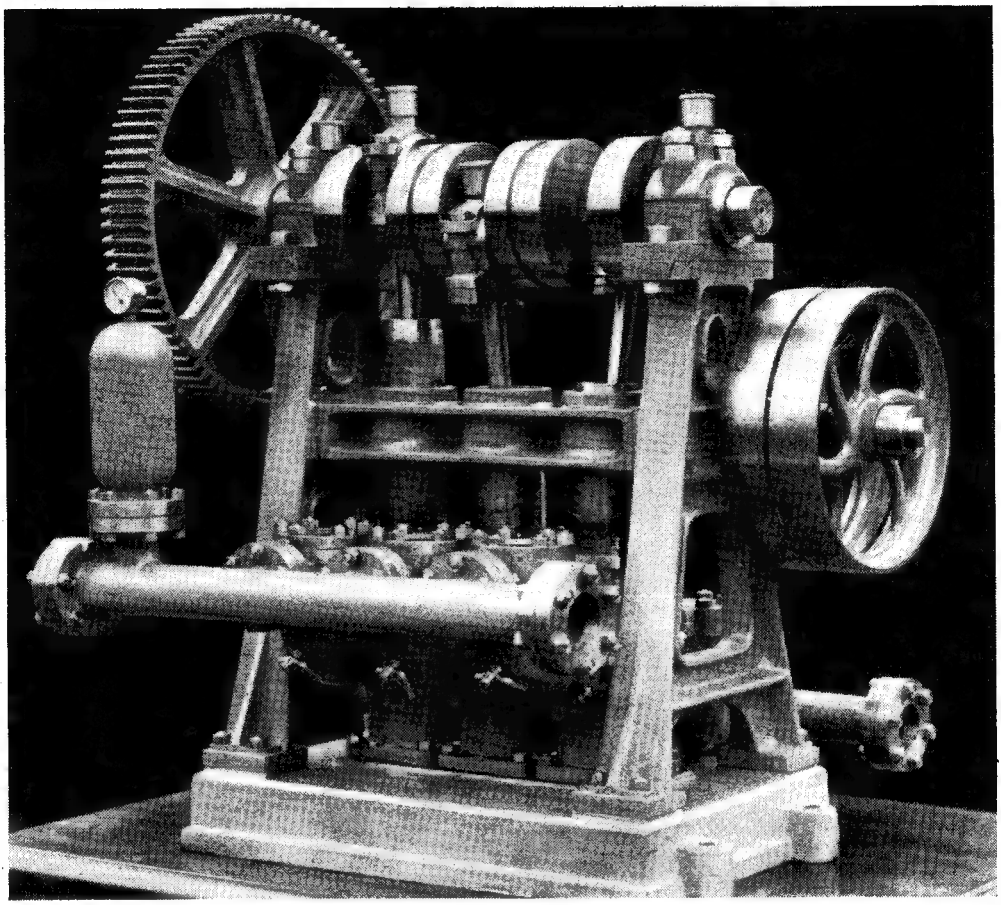

Delivery side of the pump

Holtzapffel head- and tailstock, the journals of which were 8/1000 oval. These were scraped circular and a new spindle made and lapped to fit, a new wood and steel bed was made and a heavy slide-rest fitted. By this time, iron castings were difficult to obtain, so coming by a piece of tough steel $3\frac{1}{4}$ in. × 15 in., weighing 35 lb., a start was made on the crankshaft and most of the heavy work carried out single geared. About this time I purchased a Timken bearing Atlas lathe and all machining troubles vanished. The pump barrels were faced and bored, total projection $6\frac{1}{2}$ in., including chuck, without chatter. The large gear wheel 9.15 in. dia., 90 teeth, $\frac{5}{16}$ in. pitch, was cut by mounting flat on boring table with count wheel and latch beneath. The cutter was mounted on a home-made geared milling spindle attached to a vertical slide, the pinion being cut in the [illegible] manner.

All bushes, valves and seatings, glands, bearings, big-ends and [illegible] were cast in hard gunmetal. War over, iron castings came along and with the exception of the bedplate, all facing was done on the lathe. I found it very difficult to obtain well finished 2-B.A. nuts; most were rubbish but very good ones were at last obtained from friend Potts, of Denbigh. There are 264 in the flanges.

Although not shown in the drawings, I added air vessels to both manifolds and on test the water flow from a $\frac{3}{4}$-in. pipe is visually unbroken. By restricting outlet, pressures up to 125 lb. per sq. in. were obtained. The ram packing is three rings of square graphited hemp.

While waiting for castings a $1\frac{1}{2}$ in. × $1\frac{1}{2}$ in. Stuart horizontal engine was made, together with an episcope specially adapted for accurate scale enlargement or reduction of drawings. I am now working on a thermal engine, a prime mover for pumping, which uses no fuel, but of this, with the Editor's permission, more anon. As I am approaching 70, however, with many irons in the fire and somewhat indifferent health, I do not get much time for our happy hobby!

A $2\frac{1}{2}$-in. Gauge Free-lance Electric Locomotive

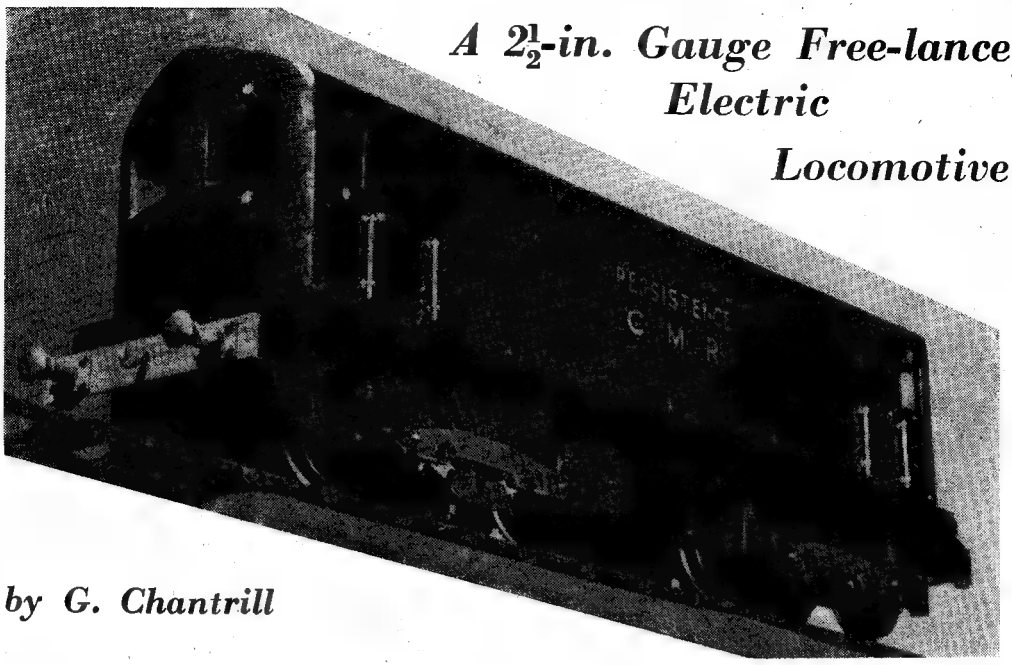

by G. Chantrill

THIS free-lance design, though, being of the two-bogie four-axle type, resembles some used by British Railways.

It has two motors, one in each bogie. A reasonable attempt has been made to keep to "scale," but this had to be abandoned in many respects, as I have not the necessary equipment.

When this locomotive was started in Ceylon in 1940, it was destined to be one to the design of Mr. Dunn, [redacted] described in *Wonderful Models* —model of the N.E.R. mixed traffic locomotive.

I departed from his design of motor and used [redacted] 7-pole laminated armature instead of [redacted] 3-pole. As this design was not satisfactory for various reasons, the second design of motor was with a conventional "U" shaped magnetic circuit with [redacted] 6-pole laminated armature on ball-bearings and a 6-segment "home made" commutator. This design was reasonably successful, but suffered from sparking at the commutator.

The next step was the fitting of interpoles which was very laborious, and made no difference to commutation, but proved, however, to be highly informative (for I [redacted] not [redacted] machine designer), and I consequently realised that interpoles are ineffective with [redacted] armature having a relatively small number of slots. I need not bore readers by elaborating the reasons for this.

I may mention that I was never satisfied that my "home-made" commutator, with riveted segments, would not disintegrate when rotating at 3,000 r.p.m. or more!

The next stage was to scrap everything and start on a new design for the third time. I now decided on [redacted] 12-segments armature (to reduce the turns per coil and therefore voltage in the

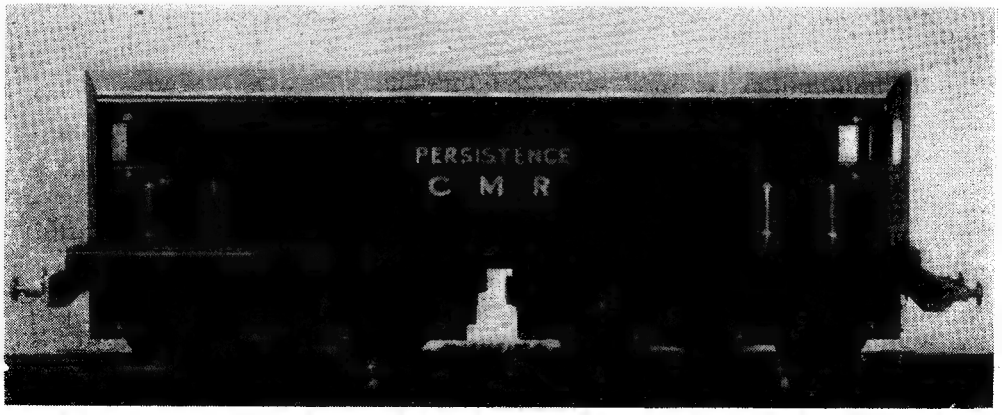

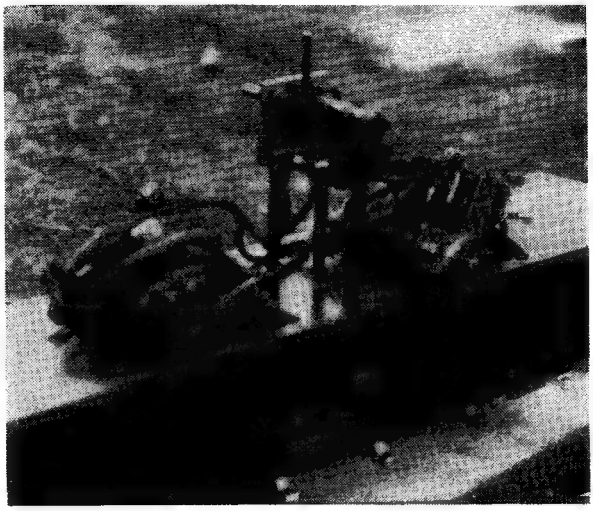

coils during commutation) with a 12-segment commutation ("bought" I must confess), and mounted on ball-bearings — anchored at the commutator end and floating at the driving end. The magnet frame is circular, laminated and with two field coils.

The brush gear was made to exacting requirements, which are necessary if good commutation is to be attained on a reversing motor.

The results with the first one were gratifying on the whole, and commutation was good.

I next decided that the motor did not develop sufficient torque, and did not absorb sufficient volts. The armature was therefore, rewound for a higher speed, and the gearing to the driving axle altered accordingly. This final design proved satisfactory as regards torque, speed, and absorbed voltage, while commutation also remained good. The second twin motor was then completed and the work on the rest of the locomotive resumed.

By the time the locomotive was completed, it only resembled the design I meant to follow in regard to overall dimensions of bogies and wheels; everything else is to my own design, which could be improved upon and simplified by an enthusiast with a lathe and workshop facilities. My design is "fiddly," but this was inevitable owing to the lack of facilities.

The motors do about 4,000 r.p.m. at 6 m.p.h., and together can develop 1/10 h.p. at 3,000 r.p.m. for long periods; they are series wound, and the two connected in series to ensure they develop the same torque. Power is supplied from an outer rail at up to 36 V, d.c. from a tapped transformer-rectifier unit, the voltage being regulated by a hand controller. Coil springs are fitted between axleboxes and bogies and the chassis is vertically and cross sprung on the bogies in conjunction with ball thrust-bearings for the centre pivots; all these features are responsible for the good track-holding qualities of the locomotive round bends at relatively high speeds. The lever of the reversing switch protrudes through the roof of the body, and is quite inconspicuous, but will be replaced by a polarised relay in due course.

The collectors, are, in principle, identical with those used in practice (though, of course, larger than scale) and function well.

The chassis has been dropped at both ends to enable the buffers to be mounted thereon, thus also making the locomotive a little longer, and, I think generally improving the appearance.

The locomotive has been running now several months, and I can modestly claim it holds the track remarkably well, and its performance has exceeded expectations. It is quite apparent that it will be well capable of hauling two adults —when I have made a truck. My son is most thrilled when the voltage is rapidly raised on starting, making the motors whine and the wheels skid!

In Defence of a Noble Ally

by C. Posthumus

IN going through my back numbers of *The Model Car News* recently, I came across Harold Pratley's interesting article, "Hints on Constructing Solids," in the November, 1948, issue, in which he brings up one point I feel prompted to dilate upon. Speaking of preparing the surface of the model for finish-painting, he touches on the subject of plastic wood, but dismisses it with "... I do not recommend the use of this type of filling; if too much is taken off a part, scrap it . . ." Fair enough, from the precision engineering point of view, but what of the keen amateur modeller, often working under difficult "kitchen table" conditions? If the error is great, scrapping may be unavoidable, but in the case of a lesser fault like, say, an undersize radius or incorrect profile at some point of a near-completed wooden body, must such drastic measures be taken, when a layer of plastic wood, properly applied and smoothed into the surrounding bodywork, can so easily remedy the trouble?

I believe plastic wood to be one of the small-scale "solid" builder's best friends. With simple initial preparation it not only fills in odd dents and cavities in the wooden body, but larger gaps as well, thus lessening the degree of skill and accuracy required in carving solids out and thereby making this fascinating hobby possible to the rawest layman in miniature carpentry. Moreover,

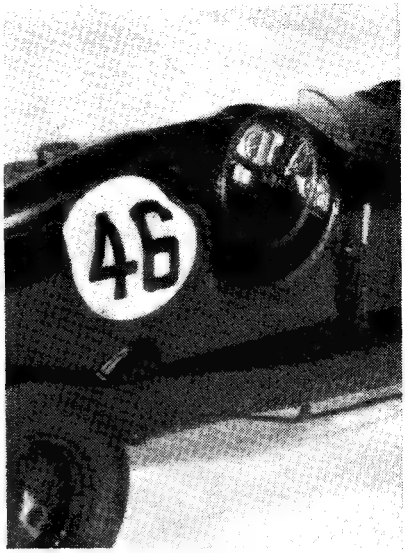

Plastic wood helped in the tricky points such as the cockpit edges, head faring, etc., on this ½-in. scale miniature of Birkin's Brooklands Bentley

it enables one to mould parts such as cowlings and farings on to the body, where it is inexpedient to form them integrally, and to set individual components into the body neatly and quickly. It is cheap and readily obtainable from the local ironmonger, multiple store or model shop; is easy to apply, easy to finish off when hardened and, when treated with shellac, sanding sealer or other "binder," is as durable as the natural wood with which it blends so admirably.

Plastic wood is, indeed, so simple a solution to many solid problems that I feel there is a tendency for the more precision-minded model engineers, resigned to achieving things the hard way, to look askance at such a "gift horse" and

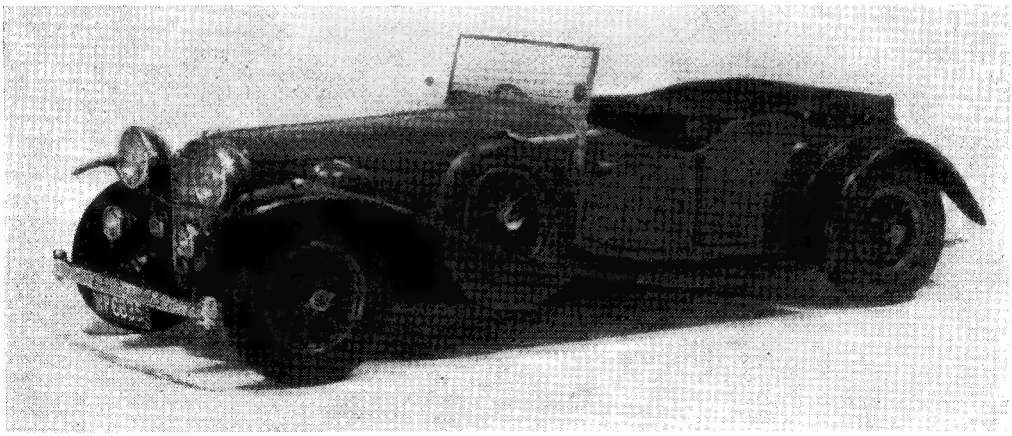

During the construction of this Alvis "Speed 20" model (1/25th scale) the plywood body sides to the seating compartment were detachable for convenience, being held in place pro tem *with countersunk woodscrews. When the time came to set them permanently in place, the ever-faithful "P.W." effectively hid all joins and screwheads*

to suspect a "catch" somewhere. Well, it isn't 100 per cent. perfect for every job, of course, but its faults are trivial and easily circumvented. The chief crib brought up against it seems to be that "it shrinks." So it does—the very makers stress this point on the label of the tin, but shrinkage is easily countered by using a little more than appears to be necessary. Then again—"It is too coarse and hairy"—but there I suggest the user has been unfortunate in his choice of brand, for as with everything else, both good and bad plastic woods are offered on the market. I have purchased stuff, seemingly composed of carelessly shredded sleeper wood, which dried a mass of long and depressing fronds, and other stuff which "hardened" into an easily crumbled powdery state, after which I bought only the products of a reputable firm, such as Rawlplug. (No, I have no interest in this company, merely a high respect for their goods). Then the critics say "it's porous," yet a good plastic wood is no more porous than many natural woods—and after all, that vital pre-enamelling coat of filler, be it of shellac, sanding sealer or thinned-out Durofix, should effectively seal any slight porosity in the body.

Obviously nothing can take the place of good, close-grained wood for the main structure to withstand the insertion of pins, screws, etc., but for eliminating surface flaws and building up small parts of the body, plastic wood is invaluable. Let me quote a few diverse instances in car modelling where plastic wood can prove to be a boon and a blessing to the "solids" man:

On the average open sports or racing car, a windscreen, either full-width or "aero" size, is mounted on the scuttle ahead of the instrument panel. On most solid models built to around ½ in. to 1 ft. scale or smaller, it is both simple and convenient to mount this screen, made in one piece from perspex or celluloid, into a slot cut with a small saw in the wooden scuttle. Obviously, this sawcut must extend right across the scuttle and hence, when the screen has been set in place with Durofix or similar adhesive, the slot ends will require plugging. For this, no better material exists than plastic wood which, after hardening, can readily be smoothed into the scuttle surface by careful filing and sand-papering.

When shaping a one-piece car body, with saw, wood-rasp and coarse files, it sometimes happens that a little too much wood is removed at one point or other, either through impatience or through insufficient data on the body contours, since often one has to "feel" to determine the lines as one proceeds. It seems a shame to have to scrap the job, having got so far in achieving what is quite a complex form, so instead the faulty area is filled up with plastic wood. Later, when forming the cockpit, one can merge the plywood sides into the body with plastic wood,

A 1/25th scale racing Delage built for R.P.R. Habershon, at one time owner of the car. Plastic wood played its part in helping to conceal joints in the copper-cum-wood body of this model, and in setting the screen and mirror in place

without need for meticulous precision fitting.

Human nature being what it is, Mr. Pratley's advice *re* first drilling small holes in wood before making them into big ones will sooner or later be neglected and the holes made hastily with the one drill. Broken and unsightly edges and an oversize hole are often the result, but the effects of such impetuosity can, perhaps undeservedly, be swiftly eradicated with a smear of plastic wood.

When attaching mirrors, " power bulges " or similar appendages to curved parts of the body, it is irksome to have to shape, say, the underneath of a tiny wooden " mirror " to mate exactly with the radius of the scuttle, so that no gaps will show. With a dab of plastic wood and Durofix, however, the mirror, its base radiused *approximately* with a few strokes of a half-round file, can be firmly positioned in a trice, any surplus cement which has squeezed out at the sides being cleaned away afterwards.

On many modern racing and road cars the frontal treatment comprises a gracefully rounded nose with curved radiator grille set therein. Though this can be reproduced simply by painting in the radiator grille in silver and black on the solid nose, or by forming grille bars with wood laminations, a more complex but far more effective way of modelling the front is to fabricate a separate metal grille, using thin brass for the surround and either wire bars or suitable gauze soldered thereto. This grille is temporarily mounted in the unfinished nose, and plastic wood moulded around its edges until nose and grille lie flush with each other in the correct manner. The plastic wood having set, the grille is delicately extracted, cleaned and plated, while the nose is finely sanded to true form ; then the finished grille is firmly reset with the aid of carefully applied adhesive.

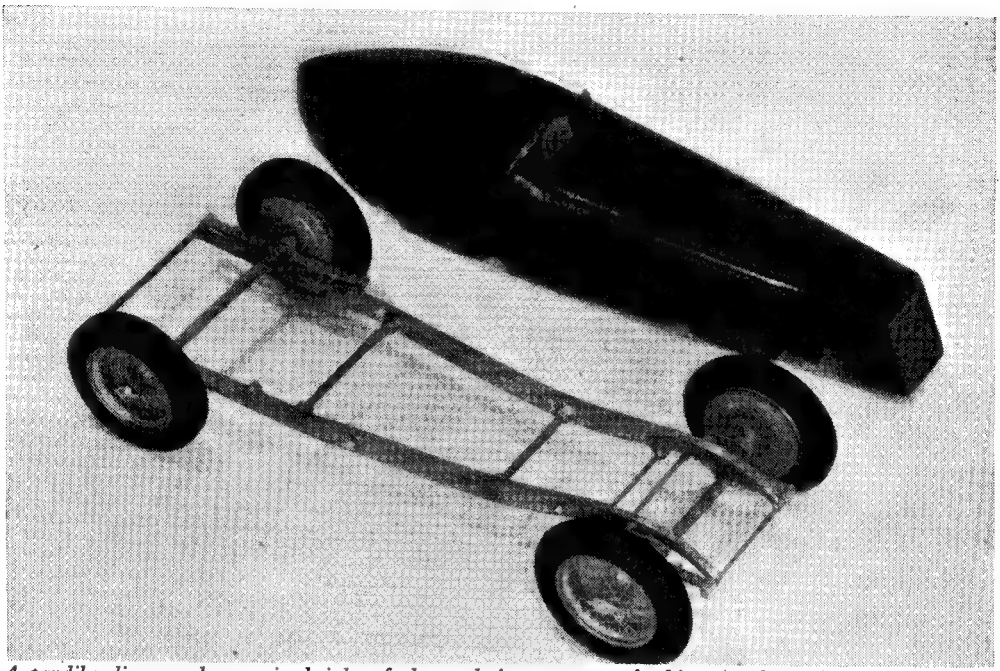

A tardily-discovered error in height of the cockpit cutaway of this 1/24th scale model of Dick Seaman's famous Delage (here seen partly completed) was speedily remedied by building up with plastic wood, subsequently reinforced with thinned-out " Durofix "

Streamlined racing cars with farings over the suspension merging into the body flanks bring further snags. The rub lies, not in shaping these farings singly, but in *matching* the pairs, and it is evening-up minor discrepancies in shape of parts such as these that plastic wood can prove extremely useful.

Plastic wood is the willing servant of all solid modellers, providing a few elementary rules regarding its use are observed. First, the surface must be clean, bare wood, unsullied by paint, shellac or other foreign matter. Roughen the area to be treated and, if possible, cut a few grooves with a sharp tool to enable the plastic wood to key in firmly. Remember its shrinking propensities, and put on a fair amount, but not *too* much, for it has only to be removed again. Very little plastic wood will be used on the average solid model, so a small tin, costing from 1s. 3d. to 2s., should last a long while if looked after properly. Don't leave the lid off, or the contents will soon harden. If you show discrimination in the brand of plastic wood you purchase, it will give no trouble but save a great deal and, when once set and cleaned up, can, like a famous make of sparking plugs, be forgotten.

"Donkey" Modifications

by G. J. Gable

IT all started with a shortage of "meth" which prevented my friend operating his 2½-in. gauge 4-6-0, just at the time when a run would have been most appreciated by an expectant and youthful audience. This, and the terrific fuel consumption and resultant poison-gas effect, led to a suggestion of paraffin—could I make a paraffin burner to replace the poison-gas plant? In course of time, after various flaming experiments, I produced a satisfactory burner, *á la* "L.B.S.C.'s" axle-dodger type. With the new burner, the locomotive made steam as never before, almost too much, and overtime was performed with the tender hand-pump to cope with the boiler's demand for water.

This continuous application of the hand-pump became monotonous—could I fit an axle-driven water-pump? It didn't take long for me to decide that *I couldn't*, I didn't relish the obviously tricky job of dismantling the boiler, frames, motion, etc., to say nothing of the possibility of damaging some irreplaceable component in the process. One can't just fix an axle-driven pump without taking everything adrift, so that was that!

However, on going through my box of redundancy, I came across an old Whitney steam donkey-pump, and the thought of adapting it to the locomotive was instantaneous. The pump (¼-in. ram, ⅝ in. bore steam cylinder, ¾-in. stroke) has pump-ram and piston-rod in one piece; a slide-valve control steam admission was operated by an eccentric on a crankshaft carrying a flywheel, rotary motion being imparted by a connecting-rod attached to the exposed part of the ram. It was in fairly good condition, not having seen much service, and worked quite well.

Obviously, it was not practicable to fit this outfit, as such, to the locomotive running board. The 1¼-in. flywheel would be in the way and look ridiculous. Consideration of possibilities decided me to try an experiment which, I reasoned, should be successful. I scrapped the flywheel, crankshaft, etc., also the old valve chamber, utilising the crankshaft bearing as a new valve chamber. The result is depicted in the sketch. The pump was then mounted on the running board of the locomotive, and arrangements made to drive the slide-valve from the locomotive valve motion. Thus we had a steam pump which would work in unison with the revs of the driving wheels, the same as obtains with an axle-driven pump!

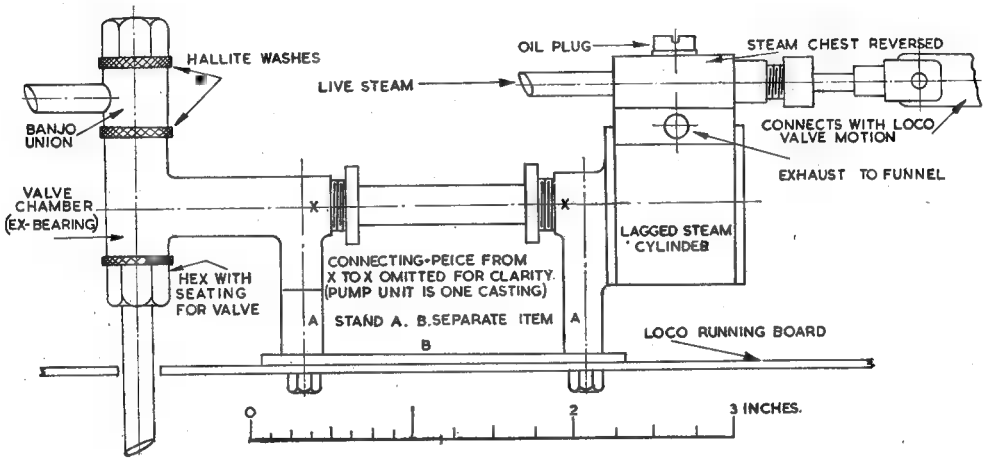

I must admit some misgivings when finally assembling for the steam test—would there be any snags? The locomotive was jacked up and the axle-dodger produced a useful head of steam before I could look round. Condensate cleared from the cylinders and the wheels were turning at a fair rate in no time. When the pump steam valve was opened, a small fountain of condensate came from the exhaust and the donkey started a new and very useful life, a complete success!

I should mention that, in my desire for simplicity, I tried out the idea of having the hand-pump outlet pipe connected to the inlet of the steam-pump, thus having only one water connection (coned union) between engine and tender, another experiment! Would the steam-pump draw water through the hand-pump valve-box? It *should*, and did! A few strokes of the hand-pump usefully prime the steam pump and ensure a full and free line to the boiler.

In conclusion, I can thoroughly recommend this system for operating a mechanical water pump. In this case the capacity is more than necessary, and a smaller outfit would do the job.

It would be interesting to hear if anyone else has tried this method of operating the slide-valve from locomotive motion.

The South London Regatta

Jutton Bros. (Guildford) starting "Vesta II" in the "B" class event

THE annual M.P.B.A. Regatta promoted by the South London M.E.S., was held on a recent Sunday, but it was somewhat handicapped by intermittent rainfall; all events, however, were held except the Nomination Race which was the last event on the programme. Heavy rain compelled this event to be abandoned, but the Steering Competition—the last but one event—was successfully completed.

The regatta opened with two races run together for Class "C" and "C" restricted hydroplanes. The distance was 500 yd., and the results for each class sorted out at the end. Actually, there was no sorting necessary! Only one boat in each class managed to finish the course on either attempt, although it must be admitted the rainy conditions were not very favourable for these craft. The successful competitors were A. Stone with *Toots* in the "C" restricted and R. Phillips with *Foz* in "C" class. The former boat did 39 m.p.h., and the latter 42.6 m.p.h. Both these competitors [redacted] S. London members.

Starts and Stops

The other craft in this race all suffered from either capsizes or engine stoppages. Among these competitors were B. Miles (Kingsmere), J. Benson (Blackheath), M. Ridley (S. London) and L. Pinder (Malden).

A 500 yd. race for Class "B" hydroplanes followed, and in this race four boats contested the honours. F. Jutton with his well-known flash-steamer *Vesta II* had [redacted] bad day. Most unusually, *Vesta II* failed to finish. In the first run the getaway ended in [redacted] dive on both starts allowed, and on the second run *Vesta II* petered out. G. Lines (Orpington) with *Sparky II* was well up to recent form, recording over 56 m.p.h. This was the fastest speed of the day in any class. It was noted that *Sparky II* had grown a tail-fin in [redacted] effort to stop tail-wag [redacted] high speed!

Another Orpington member put up the next best speed, N. Hodges with *Sparta*, 41 m.p.h.

The 500 yd. Class "A" race produced seven boats, four of which were from the Kingsmere club, and one each from Southampton, S. London and Victoria clubs.

B. Miles with *Barracuda* and *Typhoon* continued his unlucky sequence in regattas by failing to get [redacted] proper run with either of these craft. Very unfortunate, since both of them [redacted] capable of extremely high speeds. E. Clark (Victoria) was more fortunate with *Gordon 2*, recording 45 m.p.h. to win the event, while E. Walker (Kingsmere) made [redacted] good run with *Gilda* at 36 m.p.h. The Southampton representative B. Pilliner with his flash-steamer *Ginger* failed to finish [redacted] either attempt, this fate also befalling E. Coward's *Gay Gremlin*.

Speed!

The final speed event [redacted] for the new "D" class boats, but these smaller craft had not much chance against the adverse conditions. Only one boat finished the course—C. Hancox with *KM.3*.

As all of the speed events had been held with breaks occurring when the rain became too heavy, the lunch interval was not observed on this occasion and the Steering Competition followed. An exceptionally long course proved a big eliminator in this event. Out of [redacted] total entry of

twelve boats, eight failed to score, and the two best scores were only one outer and [redacted] inner—3 points. These scores were put up by Messrs. Rayman (Blackheath) and Hood (Swindon) and on the re-run the latter [redacted] the winner. Third place went to E. Walker (Kingsmere) with *Coron*.

Results

" C " Restricted Race 500 yd.
1. A Stone (South London), *Toots* : 39 m.p.h.

Class [redacted] C " Race 500 yd.
1. R. Phillips (South London), *Foz* : 42.6 m.p.h.

Class " B " Race 500 yd.
1. G. Lines (Orpington), *Sparky II* : 56.2 m.p.h.
2. N. Hodges (Orpington), *Sparta* : 41 m.p.h.

Class " A " Race 500 yd.
1. E. Clark (Victoria), *Gordon 2* : 45 m.p.h.
2. E. Walker (Kingsmere), *Gilda* : 36 m.p.h.
3. W. Parris (South London), *Wasp III* : 35.5 m.p.h.

Class " D " Race 500 yd.
1. C. Hancox (Kingsmere), *KM.3.* : 25 m.p.h.

Mr. Phillips (South London) starting [redacted] Foz," which put up a spectacular performance in the " C " class race

Steering Competition
1. J. Hood (Swindon), *Truant* : 3 pts. + 2.
2. A. Rayman (Blackheath), *Yvonne* : 3 pts. + 1.
3. E. Walker (Kingsmere), *Coron* : [redacted] pts.

Queer Lathes

T. H. Lund writes :—" In the issue of THE MODEL ENGINEER dated June 22nd, in ' Smoke Rings,' you ask the question ' Have you seen a left-handed lathe ? '

Just fifty years ago I took charge of a small engineering works, in connection with a group of collieries.

In the fitting shop there was an old lathe which was left-handed.

It [redacted] about 18 in. centres, with [redacted] bed about 30 ft. long, and complete with screwcutting and self-acting gears.

It certainly did look queer with the leadscrew [redacted] what should have been the back of the lathe and the self-act shaft on the other side.

The leadscrew had two threads per inch and [redacted] evidently intended for cutting long screws, probably leadscrews.

The feedscrew on saddle [redacted] fitted with [redacted] movable block behind the collar and [redacted] lever to snatch the tool out of cut instantly. The block [redacted] replaced for the next cut and the feed put [redacted] by the screw in the usual [redacted]. The nut on the leadscrew was disengaged in the ordinary way.

The back gear shaft ran in square blocks in rectangular-slotted holes at the back of the headstock with two pegs to lock them in the ' in ' and ' out ' position.

This lathe was in regular use under my supervision for over 20 years. It was then scrapped and broken up.

There was no maker's [redacted] or nameplate on it, but on looking through the *Engineer and Machinist's Assistant*, published by Blackie & Son in 1849, I came across [redacted] drawing of [redacted] back-geared headstock of [redacted] similar pattern, which could be used for either right- or left-hand, as the brackets for the back-gear shaft were studded to the headstock, made by Mr. Hetherington, of Manchester.

It must be over 100 years ago when it was made.

I once [redacted] another queer old lathe when visiting some brickworks, which must have been made before gap beds were thought of.

To accommodate [redacted] large faceplate, the sides of the bed were cranked outwards [redacted] that the faceplate [redacted] in [redacted] rectangular box.

It would be interesting to know if any other readers have seen any queer lathes."

A Smash—and a Repair

by J.K.M.

THE smash occurred without any warning, when the lathe was doing a job between centres, with the self-act engaged. There was an ominous whine from the change wheels, the vee-belt at the headstock squeaked in protest as it slid over the pulley and the saddle made a sudden and alarming jerk along the bed. While all this was going on, there was a most unpleasant crunching noise from somewhere inside the apron. Even while switching the machine off I was estimating that the bill for a new apron mechanism, a set of change wheels and a new leadscrew would come to a pretty large sum, not to mention the possibility of repairs to a strained saddle. Almost as cheap, I thought, to buy a new lathe. I had broken a 10-B.A. tap a little earlier on and when you have used the same tap for about five years, this is always a sign of more disasters to come.

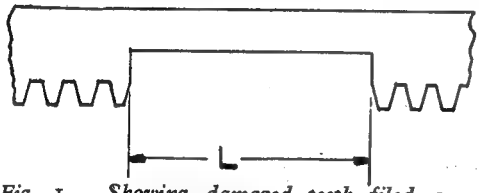

Fig. 1. Showing damaged teeth filed away

The change wheel cover was taken off first, and superficial inspection showed that although immovable, the change wheels were intact. The saddle was jammed and attempts to release the clasp nuts (which had failed to act at the moment the smash occurred), failed again. The bolts holding the apron to the saddle were then released, and it now became possible to disengage the clasp nuts, and after the apron had been swung clear it was carefully examined. Both the rack pinion and the half-nuts appeared to be in perfect condition and a similar verdict was passed on the leadscrew, which by now could easily be rotated along with the change wheels, none of which was damaged. The saddle also would move sweetly along the bed of the machine, but just under the front shear lay the rack, slightly bent between two of its attachment screws and with about six teeth missing, a rather surprising result, considering that a fair percentage of the 1/3 h.p. from the motor must have been transmitted through the slowly revolving leadscrew, when the jam-up took place. So if you must blame a lathe maker for putting in a flimsy rack, you must also praise him for the design and construction of his leadscrew, clasp nuts and gears (which on this machine are used for auto-feed as well as screw-cutting). It may be of interest to certain critics to know that the clasp nuts are die castings.

The cause of the "jam up" is still unknown. The saddle lock was quite free and since there was nothing which could have fouled the saddle it was assumed that a heavy piece of swarf had lodged in the teeth of the rack, causing the pinion to jam.

After considering various possibilities it was decided to repair the rack, and this was done as follows. The bent portion was carefully straightened out and the damaged teeth filed away, giving the result shown in Fig. 1. A piece of mild-steel, having teeth filed in it, was then fitted tightly in the gap and secured by two 4-B.A. countersunk screws as shown in Fig. 2. Of course, the difficulty here was not only to file the teeth accurately to shape but to arrange matters so that they were "in pitch" with the remaining teeth on the sound portion of the rack. This was done by first taking a piece of bright mild-steel having the same cross-section as the rack and about three times longer than the length of the gap "*L*" Fig. 1. After treating with copper sulphate to give a copper deposit, this was fastened behind a sound portion of the rack and secured with a couple of toolmakers clamps, and using the rack as a template, two teeth were marked off at each end with a sharp scriber, and sufficient in the middle to fill the gap. The teeth so marked were then filed out—an operation requiring great care. The piece was then clamped behind the rack, this time with the "repair" portion lying behind the gap. Lengthwise adjustment was then made so that the two teeth at either end were exactly in line with sound teeth on the rack, the clamps tightened and the width and depth of the gap marked off in a similar manner as before. The work then appeared as in Fig. 3. The shaded portion was next cut away and the work filed

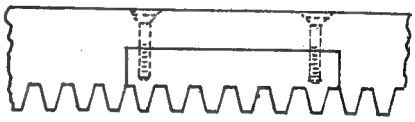

Fig. 2. The finished repair

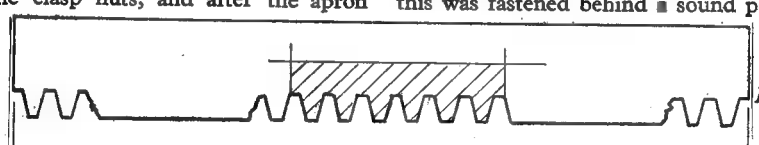

Fig. 3. Showing teeth ready for cutting away

(*Continued on next page*)

Lubricating the Spindle of the "M.E." Drilling Machine

by Frederick Massey

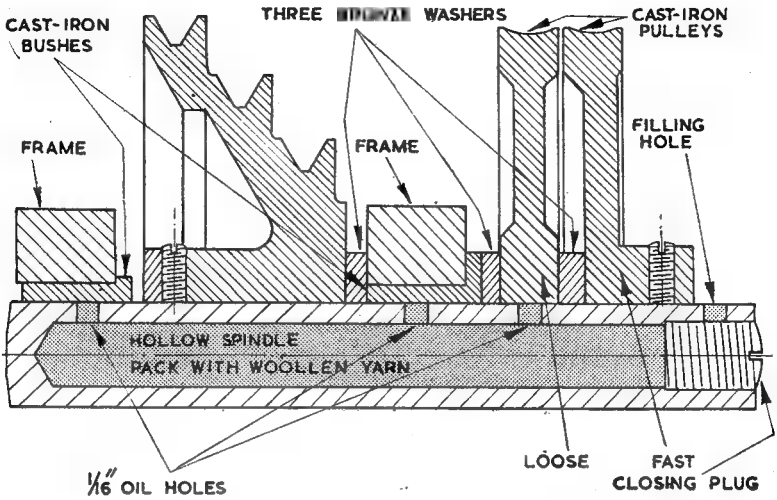

THE provision of the most suitable oil at the right places in very small quantity is essential for efficiency, long life and cleanliness.

Modern spindle oils are available in viscosities ranging from well below that of water. They are treated with extreme pressure additives and may be relied upon to prevent metal to metal contact in operating clearances down to about 0.0003 in. For the purpose of the "M.E." drilling machine driving spindle, an E.P. treated spindle oil having a viscosity of about 100 secs. at 100 deg. F. (Saybolt) would be suitable with a well finished hardened and ground spindle running in reamed cast-iron bushes.

Using this oil under these conditions a lifetime of service may be expected.

The "M.E." drilling machine is intended to be a moderately high speed tool, and oil applied to the outside of the bushes and spacing washers will be 90 per cent. wasted. The waste oil often finds its way on to the belts or is flung out. Thus a method of internal lubrication is indicated. This may be achieved by introducing the oil through a hollow spindle. With this method, when the spindle is packed with woollen yarn, centrifugal action will bleed oil from the packing and coat the inside of the hole in the spindle. It is then fed to the bushes and the loose pulley through very small holes drilled in the spindle at the proper places. These holes need not be larger than $\frac{1}{16}$ in., and any burr should be removed with an oilstone slip dipped in paraffin.

The woollen yarn should be packed into the spindle until there are few air spaces, but not rammed down tight. Replenishing is done by backing out the closing plug at the end of the shaft and applying the oil through a transverse hole. The plug may, with advantage, have a small parallel end to fit the unthreaded part of the hole and slightly compress the yarn.

Shallow Groove Fast and Loose Pulleys

These pulleys are very successful with $\frac{1}{4}$ in. or $\frac{5}{16}$ in. round leather belting. The belt flips from one groove to the other very nicely and the drive has been very satisfactory in every way. This shallow groove system has been in use for many years on industrial button-hole making machines and is thoroughly tried and tested. The belt is driven from a single deep groove pulley not less than about 18 in. away. Dimples in the shaft accommodate the Allen grub-screws. Sewing machine practice is to use two grub-screws in each pulley with the holes at right-angles, one screw setting in a dimple and the other screw, having a flat end, bearing directly on the round surface of the shaft.

A Smash—and a Repair

(*Continued from previous page*)

until it fitted snugly in the gap in the rack. The above procedure for maintaining the teeth "in pitch" was successful, for when the rack was assembled the carriage moved along the bed with only a trace of roughness as the pinion meshed with the repaired portion. This soon disappeared after the flanks of the teeth had been eased with a fine file.

Totton and New Forest Society's Exhibition

by E. C. Webb

THE newly-formed Totton and New Forest Model and Experimental Engineering Society held its first exhibition recently in conjunction with Eling Fair. The show, which lasted four days, was well supported both by visitors and exhibitors.

A feature which aroused a good deal of interest, and one which is somewhat unusual to provincial exhibitions, was the model engineer's workshop presided over by Mr. J. Butler who ably dealt with an almost continuous stream of questions, and demonstrated just " how it is done " with the aid of his old 3½-in. Drummond lathe. One man asked him " Don't you find that lathes wear out quickly ? I mean, you must need them to remain so very accurate, don't you ? "

Mr. Butler pointed to his old Drummond. " There's your answer," he said. " Bought it in 1912. It's still almost the same as when I first had it, except that the electric motor is only a couple of years old. Before I fitted that, I used to treadle, and the only renewal I've ever fitted was a new leadscrew nut which cost 3s. 6d. ! "

Locomotives in all stages of construction were well represented. The biggest of them was Mr. A. E. Salt's 9½-in. gauge Brighton Atlantic, *Selsey Bill*. Mr. Salt favours big engines and he has another 9½-in. gauge Atlantic under construction.

" Uncle Jim " Butler shows an interested visitor how it is done in the model engineer's workshop

Mr. A. M. Atkinson at work on his hand loom

"Coo!" one small boy called to a colleague when he discovered *Selsey Bill*, "come and look at this *big 'un*. It really is a real 'un—only *small*!" After which enigmatical statement, the two suddenly became aware of the sizzling safety-valves of Mr. W. Moody's "Coronation Scot" on the $3\frac{1}{2}$-in. gauge passenger track at the far end of the marquee, and they scampered off bent only on securing seats behind her. The passenger track consisted of the usual straight run, but one end of it was inside the marquee. Mr. Moody says that his "Coronation Scot" has now done about a thousand miles on the track. Her glands need repacking, but apart from that, the engine seems little the worse for a good deal of hard work. She is now withdrawn from service for the time being, so that her owner can give her a deserved overhaul.

Mr. A. Bevan's *Petrolea* and Mr. F. Salt Jnr.'s G.N. Atlantic also did good service on the passenger track. The last train on the evening of the last day was a "Royal" train, for the Festival Queen herself, Miss Shirley Warner, with one of her Maids of Honour, Miss Eileen Bond, took a trip behind Mr. Salt Jnr. and his G.N. Atlantic.

Marine models were not so numerous as might have been expected in a club so near such a big port as Southampton. Outstanding among them was the beautiful glass case model of a four-masted barque *Elizabeth Lines* by the late Mr. C. H. Lines, to a scale of 1 : 96. This model won a championship award in the 1935 "M.E." Exhibition.

A steam yacht by Mr. Butler was an interesting example of a model built entirely by "rule of thumb." She is powered by a Stuart M.T.B. two-cylinder engine with a horizontal centre-flue boiler with six cross tubes, fired by a petrol blowlamp. Several hydroplanes were on view and there was quite a variety of i.c. engines and steam plants. In fact, practically every branch was represented, from gunnery to the ever-popular steam traction engines and an attractive little breakdown train, but there was only one, unfinished, car.

A lot of interest was shown in Mr. A. M. Atkinson's hand loom, which obviously appealed to the ladies as well as the men. Mr. Atkinson demonstrated his loom in action on each of the four evenings, and showed various attractive pieces of work which he had done. The pick-up mechanism is entirely original and is his own idea.

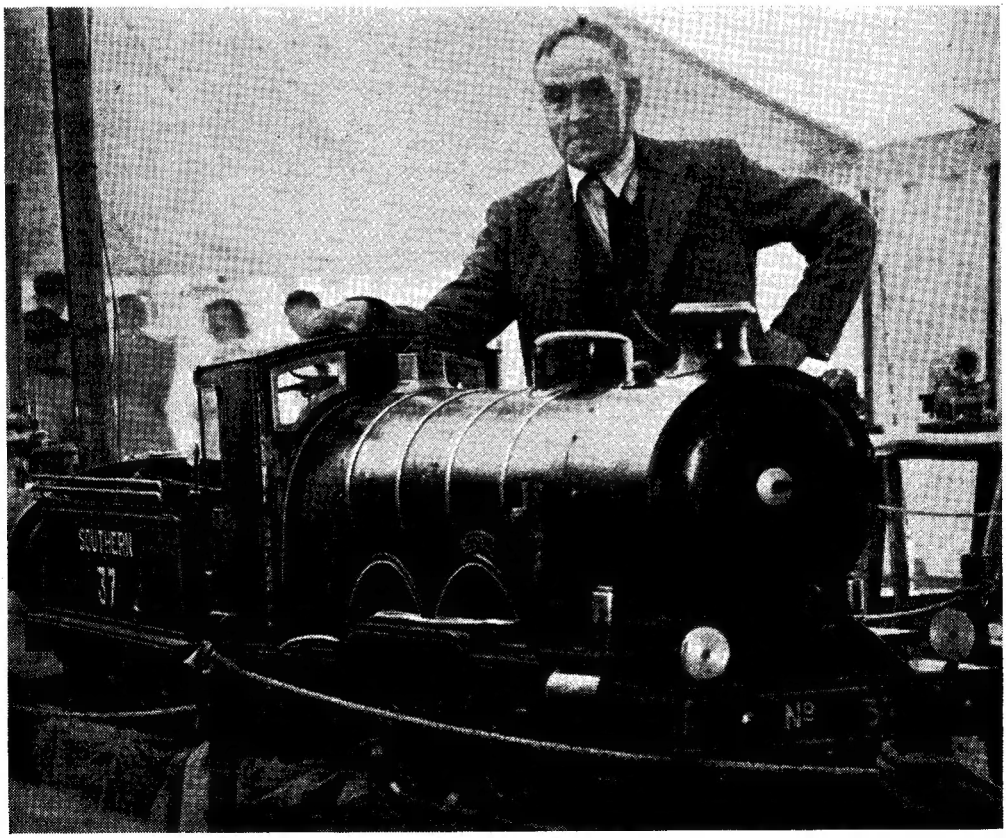

The biggest exhibit. Mr. A. E. Salt and his $9\frac{1}{2}$-in. gauge Brighton Atlantic

PRACTICAL LETTERS

Track Fixing

DEAR SIR,—I respectfully refer Mr. David Scott to Mr. Greenly's books *Model Engineering*, page 363 (reprint of 1919) and *Model Railways*, page 99 (first edition, 1924), where just such a method of securing track by keys in the sleepers is shown.

Yours faithfully,
Edinburgh. W. L. KIDSTON.

The Calendar Clock Movement

DEAR SIR,—The article in THE MODEL ENGINEER of July 20th by Mr. J. W. E. Message on a calendar movement will interest all who include horology among their hobbies. I note, however, he refers to the "inevitable" resetting by hand of the date band. Whilst this is true of the great majority of so-called calendar clocks, the great Seth Thomas, was mass-producing automatic calendar clocks 100 years ago in America. I have come across two in the past few years, one of which is in my father's possession.

These not only give each month its correct number of days, but every leap year gives February 29th. The two I know have never failed and need no maintenance whatsoever. Seth Thomas' principle is, I imagine, the basis of the "clocking-in" clocks, familiar to many factory workers, which, of course, are also fully automatic.

Yours faithfully,
Hayes. DOUGLAS HUGHES.

Sea-air v. Rust

DEAR SIR,—I was particularly interested in an article which appears under "From a 'Lone Hand'" in "Smoke Rings" in THE MODEL ENGINEER for April 13th, 1950, in perhaps more ways than one.

Being rather a lone hand myself, and continually on the move, the job of packing up one's tools and keeping them free from rust for an indefinite period at times, and for this period being deprived of the comfort and joy that one gets from using them, is rather onerous.

It would be interesting to hear from Mr. A. Thomas how he manages to keep his tools free from this bugbear RUST; yes, with capital letters! Salt air, on sea journeys, seems to find gaps in almost any type of anti-rust treatment that I have tried up to now.

Mr. Thomas seems to have journeyed considerably, from Cocos Keeling Islands, presumably *via* the United Kingdom ("Good Old England" to most of us) finally arriving at the Cape Verde Islands.

The Ideal Workshop

He should probably be able to give us other lone hands some tips, not only on how to keep away from Mr. Oxide but also on, perhaps, the ideal workshop to carry around the world. In order for him to carry out his proposed programme, he should have a lathe, which at a push can be used for drilling most holes, if he does not possess a drilling machine, a grinder to keep his drills and other cutting tools in good shape, other than the taps and dies, and a hundred and one other small tools that are generally considered indispensable, even in the smallest workshop.

I hope to have a sea trip in the not too distant future, and so would appreciate any hints and tips from an already experienced traveller. Perhaps others have ideas on this matter that would be of interest to others than myself. I have seen numerous articles on how to combat this nuisance in the home workshop, but never one for the traveller.

My Method

The method I generally adopt is to wrap each piece in an oil-saturated rag, which in turn is either wrapped in further rag or paper. Neither of these is really safe if the box gets wet enough to saturate the paper or rag, as they do not get an opportunity to dry out. A method I have seen adopted by South Bend, a well-known American make of lathe, is the complete covering of all exposed parts with what appears to be a thick black mass which is not hard and brittle but rather soft and flexible, although it can be handled with ease and does not soil the hands when touched. I noticed in a machine shop that this mass was being removed by elbow grease and a rag soaked in petrol. This removal appeared to be a rather messy job. I must say that there was not a spot of rust anywhere, but the lathe was practically dismantled to effect the cleaning.

I have been a reader of THE MODEL ENGINEER for many years now, but unfortunately I am unable to have my collection always with me. These have been stored in boxes in various places, which I hope to collect at some future date, before or when I retire. What an orgy of re-reading I shall have then!

Building a "Bat"

At the present time, I am completing the "Bat" which appeared in THE MODEL ENGINEER for the year 1940. I obtained most of the material from Bonds, with the exception of the wheels, during 1940 or 1941, and slowly it has taken shape. The wheels were obtained after the war and assembly is almost complete.

Other things have occupied my leisure hours in the meantime, fishing-reels, tools of all descriptions, micrometers, depth gauges with micrometer heads, scribing-block, box spanners and numerous other tools.

I am often asked if I do not get fed up with a job that is on my hands so long? My reply is that a change of job is as good as a rest, and one returns to it with renewed vigour.

How I envy folk at home who can just go into a shop and buy this or that, and if a casting is not just as it should be, another can be obtained without the expenditure of too great an amount of

cash. Much greater care must be taken, however, if there is only one casting, and there is no room for mistakes. A similar casting might take months to obtain, and even then, when it does turn up, might not be exactly what one requires.

To read "L.B.S.C." is a joy, but a little exasperating when he says smear the threads with a little "Boss White" before screwing in. What is "Boss White"? Presumably a white-lead jointing material which is ideal for steam-proofing screw threads. But unfortunately "Boss White" is in the shops in England, and what are we lone hands to use to effect a similarly tight joint? Red-lead mixed with linseed oil is rather messy to put on an $\frac{1}{8}$-in. 60-t.p.i. tube for the inlet to the steam chest. Perhaps "L.B.S.C." could oblige with a recipe that can be made up in small quantities and used for this purpose.

The modeller's wife has not been forgotten during the years of modelling. A table tray with folding legs, a wool winder that appeared in THE MODEL ENGINEER during the last war, ironing-board and sleeve board, table lamps, etc., besides occasional attention to the sewing machine.

Several other engineering papers have come and gone but THE MODEL ENGINEER is a constant companion that does not turn up with the regularity that it is turned out from the printing works. However, the main thing is that it turns up.

One thing that is missed more than anything else, is THE MODEL ENGINEER Exhibition. What a joy it must be to be able to see and be amongst such a collection of workmanship and craftsmanship. What an incentive it must be to novices and the more advanced workers to be able to see what a really first-class model looks like and the standard to which to aim for in the model they themselves are constructing.

I must terminate with my congratulations to you and your staff for the magnificent magazine that seems to improve with every copy that is received.

Yours faithfully,

Rio Grande. E. A. SEARLES.

Model Boilers

DEAR SIR,—In thanking "A.D.S." (July 6th issue) for his helpful and contructive criticism of the model Scotch boiler, now installed in the boat, may I explain the funnel arrangement?

The hull was originally designed for a different power unit, and to put the boiler funnel in its proper position, would necessitate a position of the boat funnel to look ridiculous; furthermore, the extension from smokebox to uptake contains more than the eye can see, but that is another story.

With regard to firing, coal it is, and coal it must be! But I will divulge a secret, and that is, a semi-automatic stoker (coal) is not too distant an eventuality, true to prototype or not! Photographs and description of her behaviour will be produced, as soon as the weeds decide to take a holiday from the pond.

Yours faithfully,

London, S.W.7. "SMOKY."

Hardening and Tempering Carbon Steel

DEAR SIR,—I would like to offer a few corrections to the article on the above subject by M. Hall in the issue for July 6th, 1950. No doubt Mr. Hall has simplified his article for the benefit of readers not conversant with the theory of hardening and tempering, but his simplification has led to some incorrectness.

The chief hardening constitutent of steel at normal temperatures is a hard chemical compound, iron carbide Fe_3C, known as "cementite." In carbon steels under 0.89 per cent. C., cementite forms alternate layers with almost pure iron (known as "ferrite"). It is this combination of layers that is known as "pearlite" due to its pearl-like appearance under the microscope, and is presumably what Mr. Hall refers to as "pearlite carbon." At 0.89 per cent. C. the steel is composed of all pearlite, and above 0.89 per cent. C. the steel is composed of pearlite plus pure cementite.

When a carbon steel is heated above the upper critical temperature, the iron changes its crystal formation to "austenite" which dissolves the carbon present. This solid solution is certainly not hard, as the steel can be hammered and forged at this temperature. Upon quenching the steel in water, the austenite is not retained but a new structure is precipitated, namely "martensite." Martensite is extremely hard but brittle, therefore it is usual to modify the structure to troostite plus martensite, by a slower rate of cooling or by reheating and quenching the steel from a required temperature between the upper and lower critical temperatures (tempering).

It is not my purpose to ruthlessly pull Mr. Hall's otherwise useful article to pieces, but I think that as THE MODEL ENGINEER can claim to be equal to any other similar journal in the technical standard of its articles, it is as well for us to be correct in details such as those mentioned.

Yours faithfully,

West Bromwich. G. BROWN.

Fabricating Engines

DEAR SIR,—Reference "Queries and Replies" No. 9833 by C.B. (W. Kensington).

The printed sketches replying to C.B.'s letter illustrate almost exactly the arrangement of my steam ports and passages. An exception is the exhaust cavity (see illustration, page 119) in plate No. 2. This, in my case, was left solid until the soldering operation had been completed. It was then that an exhaust way was drilled into plate No. 2, and it also went partly into plate No. 1. This hole was tapped for the stub of the exhaust pipe to be screwed into place. The port plate, i.e. No. 3, was drilled through with an $\frac{1}{8}$-in. diameter drill and finished to a rectangular slot with a small square file.

I would also mention that I used $\frac{1}{16}$-in. brass plate for the vertical engine, and the passages were, therefore, $\frac{1}{16}$ in. deep and the width is $\frac{1}{4}$ in.

If any additional information is required I will be only too pleased to write direct to Mr. C.B.

Yours faithfully,

Sheffield. R. HOWE.